PILOT OPERATING HANDBOOK

THE AIRPLANE FACTORY SLING

THE AIRPLANE FACTORY (Pty) Ltd.
HANGAR 8 TEDDERFIELD AIR PARK, JHB SOUTH, EIKENHOF, 1872, SOUTH AFRICA
PO BOX 308, EIKENHOF, 1872, SOUTH AFRICA
Phone: +27 11 948 9898
Information: info@airplanefactory.co.za

The Airplane Factory, Inc
3401 Airport Drive, Torrance, CA, 90505
Phone: 424-241-0341
info@airplanefactory.com

Date of Issue: 07 July 2014 **Revision Number: 1. 3**

Airplane model :	**Airplane Factory Sling LSA**
Manufacturer :	**The Airplane Factory (Pty) Ltd**
Airplane Serial Number :	**…….**
Date of Construction :	**……..**
Registration :	**…….**
Airworthiness Category :	**Light Sport Aircraft (LSA)**
Issue Date of POH :	**07 July 2014**

PLEASE ADVISE THE AIRPLANE FACTORY ON CHANGE
OF OWNERSHIP OF THE AIRCRAFT

This airplane must be operated in compliance with information and limitations contained herein. This pilot operating handbook must be available on board of the airplane at all times.

NOTICE

WITH RESPECT TO ELECTRICAL WIRING, AIRCRAFT MANUFACTURED BEFORE AUGUST 2014 MAY NOT BE FULLY COMPLIANT WITH THIS MANUAL.

THIS MANUAL IS WRITTEN FOR THE STANDARD 912 ULS POWERED SLING LSA, AS MANUFACTURED ON PREMISES BY THE AIRPLANE FACTORY (PTY) LTD). DIFFERENCES APPLICABLE TO THE STANDARD 912 iS POWERED SLING LSA AIRCRAFT, AS MANUFACTURED ON PREMISES BY THE AIRPLANE FACTORY (PTY) LTD, ARE INCLUDED IN A SUPPLEMENT IN SECTION 9 OF THIS HANDBOOK.

AIRCRAFT WHICH DIFFER FROM THE PRODUCTION STANDARD, IN WHATEVER WAY, ARE NOT ADDRESSED IN THIS MANUAL, EXCEPT TO THE EXTENT SAID AIRCRAFT CORRESPOND WITH THE PRODUCTION STANDARD.

NOTICE

THIS EDITION OF THIS MANUAL IS APPLICABLE TO AIRCRAFT REGISTERED IN THE USA. DEFINITIONS ARE ACCORDINGLY CONSISTENT WITH US REGULATIONS ONLY.

POH Compliance Notice

ASTM Standards used for the design, construction, and continued airworthiness:

- ASTM F2279.
- ASTM F2295.
- ASTM F2245.

Quality assurance records are stored both with the original manufacturer in South Africa and with its US distributor at the addresses below.

The Airplane Factory (Pty) Ltd
Hangar 8 Tedderfield Air Park, Johannesburg South, Eikenhof, 1872, South Africa
PO Box 308, Eikenhof, 1872, South Africa
Phone: +27 11 948 9898
info@airplanefactory.co.za

The Airplane Factory USA
3401 Airport Drive, Torrance, CA, 90505
Phone: 424-241-0341
info@airplanefactory.com

Continued Operational Safety Monitoring

Manufacturer Responsibilities

The Airplane Factory has a procedure in place to monitor the safety of the fleet and to alert pilots of any potential safety issues. The owner of a Light Sport Aircraft is responsible for making sure they receive pertinent safety information and complying with bulletins. The owner of a Light Sport Aircraft is also responsible for alerting the manufacturer of any potential safety of flight issues.

Report a Safety of Flight Issue

Please contact our US Distribution Center to report any maintenance, service or safety issues.

Service/Maintenance/Safety issues: safety@airplanefactory.com

or

fill out a safety/service form on our website: www.airplanefactory.com.

Sign up to receive safety notices

Method for Owner/Operator to obtain the latest Safety of Flight Information:

Please sign up on our website for continued safety/service updates: www.airplanefactory.com, or call 424-241-0341, and we'll sign you up. In addition, all updates will be posted to our website.

Detailed Owner/Operator Responsibilities

- Each owner/operator of a LSA shall read and comply with the maintenance and continued airworthiness information and instructions provided by the manufacturer.
- Each owner/operator of a LSA shall be responsible for providing the manufacturer with current contact information, where the manufacturer may send the owner/operator supplemental notification bulletins.
- The owner/operator or a LSA shall be responsible for notifying the manufacturer of any safety of flight issue or significant service difficulty, upon discovery.
- The owner/operator of a LSA shall be responsible for complying with all manufacturer issued notices of corrective action and for complying with all applicable aviation authority regulations in regard to maintaining the airworthiness of the LSA.
- An owner of a LSA shall ensure that any needed corrective action be completed as specified in a notice, or by the next scheduled annual inspection.
- Should an owner/operator not comply with any mandatory service requirements, the LSA shall be considered not in compliance with applicable ASTM standards and may be subject to regulatory action by the presiding aviation authority (FAA).

RECORD OF REVISIONS

Any revisions to this Pilots Operating Handbook must be recorded in the following table, and, where applicable, be endorsed by the responsible airworthiness authority

Revision numbers and dates appear at the foot of each page.

Rev No.	Affected Section	Affected Pages	Date of Issue	Approved by	Date of approval	Date inserted	Sign.
1.1	All	All	04/20/2011				
1.2	All	All	03/12/2012				
1.3	All	All	07/07/2014				

LIST OF EFFECTIVE PAGES

Page	Page Status	Latest Revision	Page	Page Status	Latest revision
i	Revised	1.3	1-10	Revised	1.3
ii	Revised	1.3	1-11	Revised	1.3
iii	Revised	1.3	1-12	Revised	1.3
iv	Revised	1.3	1-13	Revised	1.3
v	Revised	1.3	1-14	Revised	1.3
vi	Revised	1.3	1-15	Revised	1.3
vii	Revised	1.3	1-16	Revised	1.3
viii	Revised	1.3	1-17	Revised	1.3
ix	Revised	1.3	1-18	Revised	1.3
x	Revised	1.3	2-1/2-2	Revised	1.3
xi	Revised	1.3	2-3	Revised	1.3
xii	Revised	1.3	2-4	Revised	1.3
1-1/1-2	Revised	1.3	2-5	Revised	1.3
1-3	Revised	1.3	2-6	Revised	1.3
1-4	Revised	1.3	2-7	Revised	1.3
1-5	Revised	1.3	2-8	Revised	1.3
1-6	Revised	1.3	2-9	Revised	1.3

1-7	Revised	1.3
1-8	Revised	1.3
1-9	Revised	1.3
2-13	Revised	1.3
2-14	Revised	1.3
2-15	Revised	1.3
2-16	Revised	1.3
2-17	Revised	1.3
2-18	Revised	1.3
2-19	Revised	1.3
2-20	Revised	1.3
2-21	Revised	1.3
2-22	Revised	1.3
3-1/3-2	Revised	1.3
3-3	Revised	1.3
3-4	Revised	1.3
3-5	Revised	1.3
3-6	Revised	1.3
3-7	Revised	1.3
3-8	Revised	1.3

2-10	Revised	1.3
2-11	Revised	1.3
2-12	Revised	1.3
3-14	Revised	1.3
3-15	Revised	1.3
3-16	Revised	1.3
3-17	Revised	1.3
3-18	Revised	1.3
3-19	Revised	1.3
4-1/4-2	Revised	1.3
4-3	Revised	1.3
4-4	Revised	1.3
4-5	Revised	1.3
4-6	Revised	1.3
4-7	Revised	1.3
4-8	Revised	1.3
4-9	Revised	1.3
4-10	Revised	1.3
4-11	Revised	1.3
4-12	Revised	1.3

3-9	Revised	1.3
3-10	Revised	1.3
3-11	Revised	1.3
3-12	Revised	1.3
3-13	Revised	1.3

4-13	Revised	1.3
4-14	Revised	1.3
4-15	Revised	1.3
4-16	Revised	1.3
4-17	Revised	1.3

Page	Page Status	Latest Revision
4-18	Revised	1.3
4-19	Revised	1.3
4-20	Revised	1.3
5-1/5-2	Revised	1.3
5-3	Revised	1.3
5-4	Revised	1.3
5-5	Revised	1.3
5-6	Revised	1.3
5-7	Revised	1.3
6-1/6-2	Revised	1.3
6-3	Revised	1.3
6-4	Revised	1.3
6-5	Revised	1.3
6-6	Revised	1.3
6-7	Revised	1.3
6-8	Revised	1.3
6-9	Revised	1.3
7-1/7-2	Revised	1.3
7-3	Revised	1.3
7-4	Revised	1.3
7-5	Revised	1.3

Page	Page Status	Latest Revision
7-6	Revised	1.3
7-7	Revised	1.3
7-8	Revised	1.3
7-9	Revised	1.3
7-10	Revised	1.3
7-11	Revised	1.3
7-12	Revised	1.3
7-13	Revised	1.3
7-14	Revised	1.3
7-15	Revised	1.3
7-16	Revised	1.3
7-17	Revised	1.3
7-18	Revised	1.3
7-19	Revised	1.3
7-20	Revised	1.3
7-21	Revised	1.3
7-22	Revised	1.3
7-23	Revised	1.3
7-24	Revised	1.3
7-25	Revised	1.3
7-26	Revised	1.3

Page	Page Status	Latest Revision
7-27	Revised	1.3
7-28	Revised	1.3
7-29	Revised	1.3
7-30	Revised	1.3
7-31	Revised	1.3
7-32	Revised	1.3
8-1/8-2	Revised	1.3
8-3	Revised	1.3
8-4	Revised	1.3
8-5	Revised	1.3
8-6	Revised	1.3
8-7	Revised	1.3
8-8	Revised	1.3
8-9	Revised	1.3
9-1/9-2	Revised	1.3
9-3	Revised	1.3
9-4	Revised	1.3
9-5	Revised	1.3
9-6	Revised	1.3

Page	Page Status	Latest Revision
9-7	Revised	1.3
9-8	Revised	1.3
9-9	Revised	1.3
9-10	Revised	1.3
9-11	Revised	1.3
9-12	Revised	1.3
9-13	Revised	1.3
9-14	Revised	1.3
9-15	Revised	1.3
9-16	Revised	1.3
9-17	Revised	1.3
9-18	Revised	1.3
9-19	Revised	1.3
9-20	Revised	1.3
9-21	Revised	1.3

TABLE OF CONTENTS

1. GENERAL INFORMATION

1.1 Introduction to airplane

The Airplane Factory Sling LSA is a two seat (side-by-side), single engine, tricycle undercarriage aluminum aircraft with a conventional low wing design and is compliant with the requirements of the FAA Light Sport Aircraft (LSA) category according to ASTM Standards F2245, F2279 and F2295.

With only minor modifications to the aircraft and the application of a revised Pilot's Operating Handbook the Sling LSA may be made to comply with the requirements of the EASA (European Aviation Safety Agency) CS-VLA (Certification Standard Very Light Aircraft) standard, having a maximum all up weight of 700 kg (1543.24 lb).

The Sling LSA is intended chiefly for recreational and cross-country flying. It is not intended for aerobatic operation. It is considered to be suitable for use as a trainer. This Pilot Operating Handbook has been prepared to provide pilots with information for the safe and efficient operation of the Sling LSA.

1.2 Warnings, cautions and notes

The following definitions apply to warnings, cautions and notes in the Pilot Operating Handbook.

WARNING

Means that non-observation of the corresponding procedure leads to an immediate or important degradation of flight safety.

CAUTION

Means that non-observation of the corresponding procedure leads to a minor or possible long term degradation of flight safety.

NOTE

Draws attention to any special item not directly related to safety but which is important or unusual.

1.3 Aircraft 3-view drawing

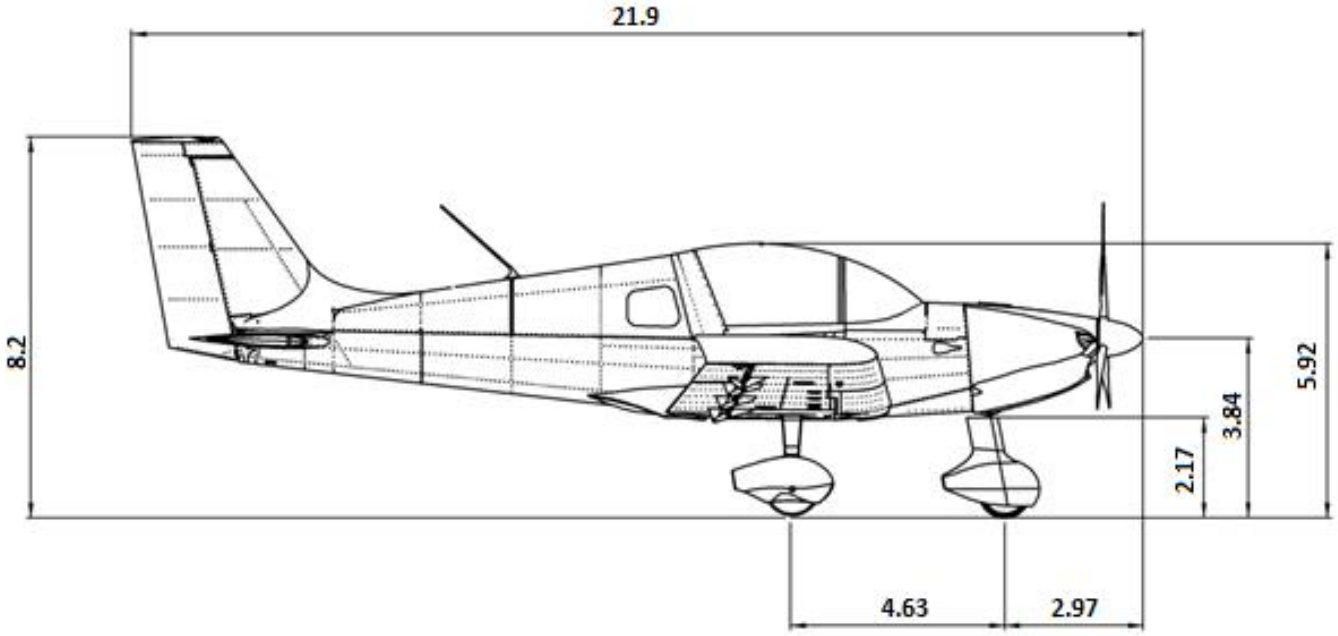

DIMENSIONS IN THIS DRAWING ARE IN FEET.

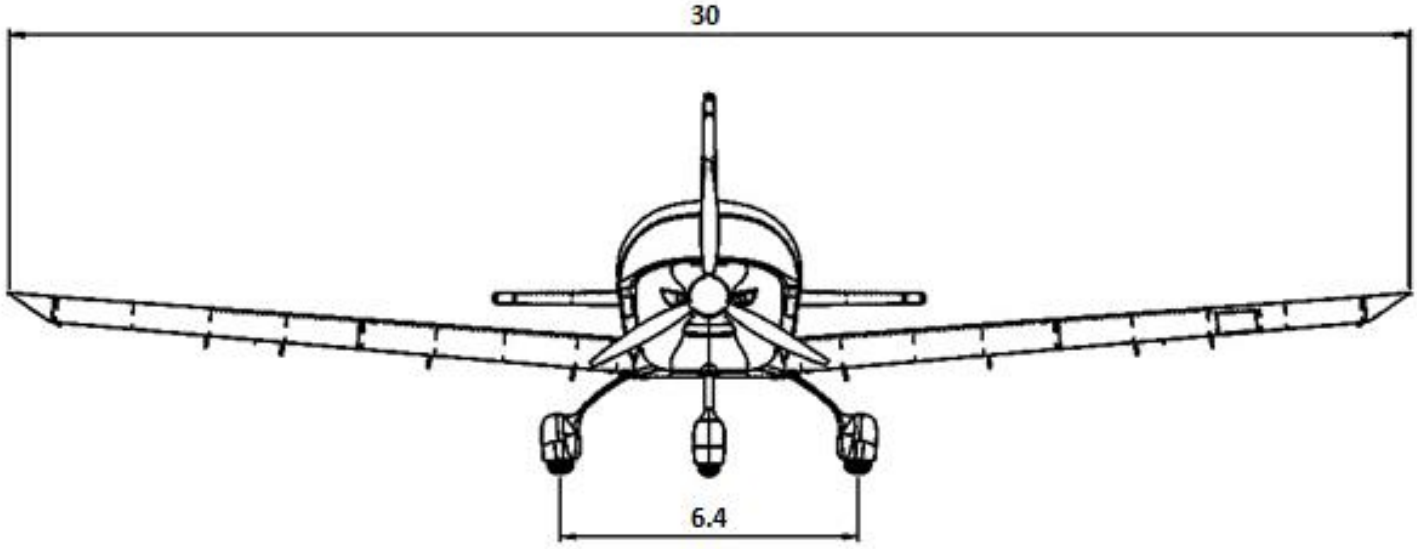

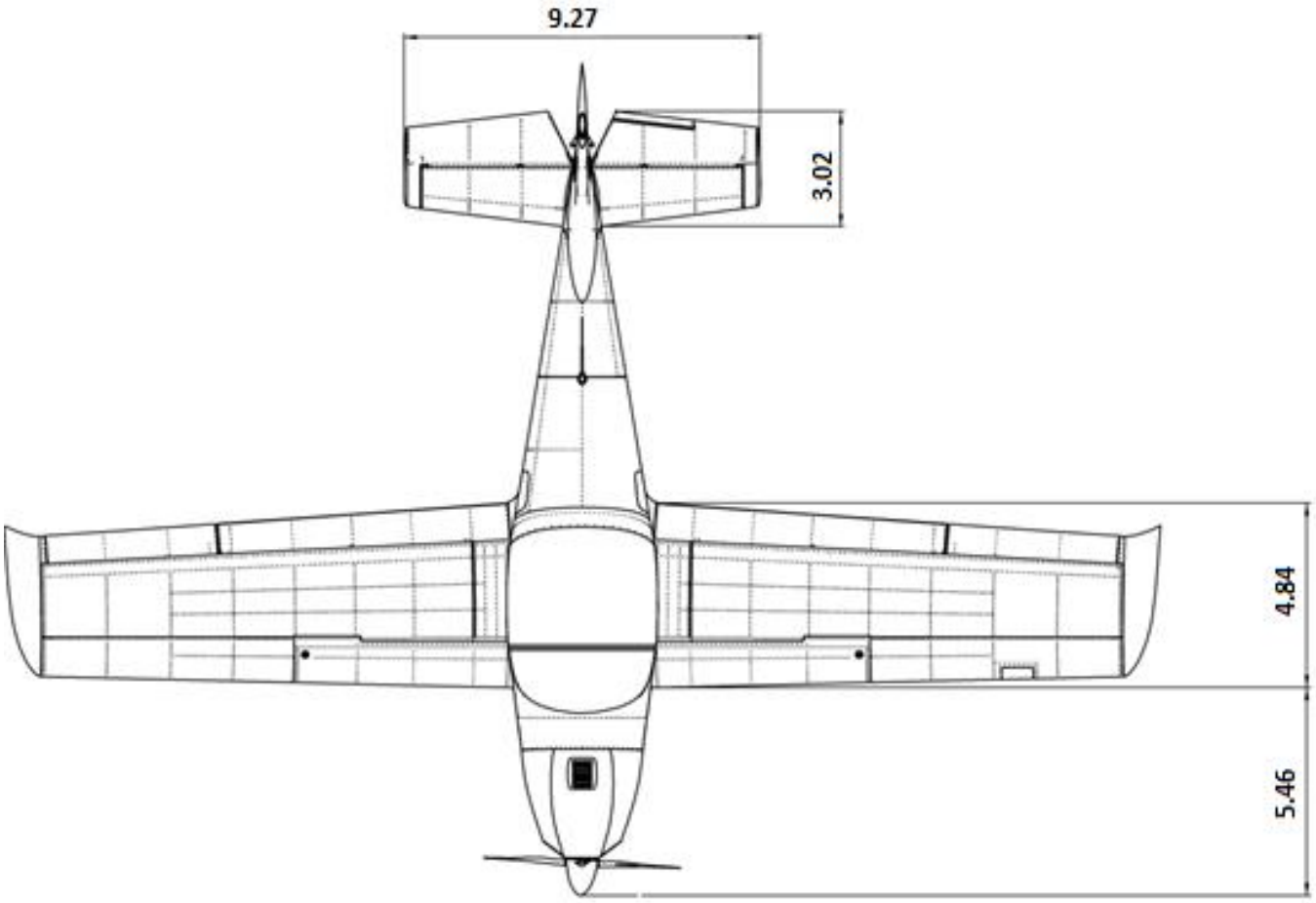

DIMENSIONS IN THIS DRAWING ARE IN FEET.

1.4 Data for Sling LSA aircraft and systems

WING

Wing span:	9.165 m (30 ft).
Mean Aerodynamic Chord:	1.339 m (52.7 inch).
Wing surface area:	11.845 m^2 (131.75 ft^2).
Wing loading:	59.10 kgm^{-2} (11.7 lb /ft^2).
Aspect ratio:	7.04.
Taper ratio:	1.375.
Dihedral:	5°

FUSELAGE

Fuselage length:	5.77 m (19 ft).
Overall length:	6.675 m (21ft 11 inches).
Overall width:	1.15 m (45 inches).
Overall height:	2. 5m (98 inches).

EMPENNAGE

Horizontal stabilizer span:	2.825 m (9 ft 3 inch).
Horizontal stabilizer surface area:	0.96 m^2 (10 ft^2).
Elevator surface area:	1.02 m^2 (11 ft^2).
Horizontal stabilizer angle of incidence	-4°
Vertical stabilizer span:	1.47 m (16 ft).
Vertical stabilizer surface area:	0.53 m^2 (6 ft^2).
Rudder surface area:	0.59 m^2 (6 ft^2).

LANDING GEAR

Wheel track:	1.95 m (6ft 5 inches).
Wheel base:	1.41m (4ft 6 inches).
Brakes:	Hydraulic.
Main gear tires:	15x6.00-6, 6-ply (2.2 bar / 30 psi) pressure).

Nose gear tires:	5.00-5, 6-ply (1.8 bar / 26 psi pressure).

CONTROL SURFACE TRAVEL LIMITS

Ailerons:	24° up and down (±2°).
Elevator:	30° up and 20° down (±2°).
Trim tab:	5° up and 32° down (±5°).
Rudder:	25° left and right (±2°).
Flaps:	0° to 30° down(±3°).

ENGINE

Manufacturer:	Bombardier-Rotax GmbH.
Model:	912 ULS.
Type:	4 Cylinder horizontally opposed with overall displacement 1 352 cc, mixed cooling (water-cooled heads and air-cooled cylinders), twin carburetors, integrated reduction gearbox with torque damper
Maximum power:	73.5 kW (98.5hp) at 5 800 rpm (maximum 5 minutes). 69 kW (92.5hp) at 5 500 rpm (continuous).

For Sling LSA aircraft fitted with the 912 iS engine refer to the applicable supplement at the end of this manual.

PROPELLER

Manufacturer:	Warp drive.
No of blades:	3.
Diameter:	1.83 m (72 inches).
Type:	Composite.

FUEL

Fuel grade:	Minimum RON 95 / minimum AKI 91. MOGAS: EN 228 Super, EN 228 Super plus, ASTMD4814. Leaded AVGAS: AVGAS 100LL (ASTM D910). Unleaded AVGAS: UL91 (ASTM D7547). (Refer to latest revision of engine operator / maintenance manual and latest revision of service instruction SI-912-016. For aircraft fitted with the 912 iS engines refer to the applicable supplement at the end of this manual).
Fuel tanks:	Two. One fuel tank integrated within each wing leading edge. Each tank is equipped with finger strainers (in pick up line) and drain fittings.
Capacity of tank:	75 liters (19.8 US gallons), 73 liters (19.3 US gallons useable).
Total capacity:	150 liters (39.6 US gallons).
Total usable fuel:	146 liters (38.6 US gallons).

OIL SYSTEM

Oil system type:	Forced, with external oil reservoir.
Oil:	Automotive grade API "SF" or "SG" type oil preferably synthetic or semi-synthetic. When operating on unleaded fuels or MOGAS fully synthetic oil is recommended. (Refer to latest revision of engine operator / maintenance manual and latest revision of service instruction SI-912-016. For aircraft fitted with the 912 iS engine refer to the applicable supplement at the end of this manual).
Capacity:	3.5 liters (3.5 quarts) (approximately).

COOLING

Cooling system:	Mixed: air and liquid pressurized closed circuit system.
Coolant:	1. Water-free propylene glycol based coolant concentrate (<u>this is not allowed for 912 iS engine</u>). 2. Ethylene glycol based coolant mixed 1:1 with distilled water. <u>Note: Do not mix the above types of coolant.</u>
Capacity:	2.5 liters (2.5 quarts pints) (approximately).

MAXIMUM WEIGHTS

Maximum take-off weight:	600 kg (1320 lb).
Maximum landing weight:	600 kg (1320lb).
Maximum baggage weight:	15 kg (77lbs (this is what we say) lb).
Front luggage compartment maximum	15 kg (77lb).
Rear luggage compartment maximum	15 kg (55 lb).

STANDARD WEIGHTS

Standard empty weight:	370 kg (814 lb).
Maximum useful load:	230 kg (506 lb).

SPECIFIC LOADINGS

Wing loading (MAUW):	50.65 $kg.m^{-2}$ (10.0 $lb.ft^{-2}$).
Power loading:	6.00 $kg.hp^{-1}$ (13.2 $lb.hp^{-1}$).

1.5 Terminology, symbols and conversion factors

General terminology / acronyms

AC	Alternating Current.
ALT	Altimeter.
API	American Petroleum Institute
ASI	Airspeed Indicator.
AVGAS	Aviation gasoline.
COM	Communication (radio).
EFIS	Electronic Flight Information System.
FAA	Federal Aviation Authority.
GLS	GPS Landing System.
GmbH	Gesellschaft mit beschränkter Haftung (company with limited liability).
GPS	Global Positioning System.
IFR	Instrument Flying Rules.
LED	Light Emitting Diode.
MOGAS	Automobile (car) gasoline.
NGL	Normal Ground Line.
NRV	Non Return Valve.
POH	Pilot Operating Handbook.
PTT	Push-To-Talk (button).
VFR	Visual Flying Rules.
VMC	Visual Meteorological Conditions.
VSI	Vertical Speed Indicator.

General airspeed terminology and symbols

IAS	Indicated Airspeed.
KCAS	Calibrated Airspeed, being the indicated airspeed corrected for position and instrument error, expressed in knots.
KIAS	Indicated Airspeed, being the speed shown on the airspeed indicator, expressed in knots.
KTAS	True Airspeed, being the airspeed, expressed in knots, relative to undisturbed air, and which is KCAS corrected for altitude and temperature.
TAS	True Airspeed.
V_A	Maneuvering speed.
V_{BG}	Best Glide Speed, being the speed (at MAUW) which results in the greatest gliding distance over the ground.
V_{FE}	Maximum Flap Extended Speed, being the highest speed permissible with wing flaps deployed.
V_H	Maximum Speed in level flight at maximum continuous power.
V_{LOF}	Lift-off Speed, being the speed at which the aircraft generally lifts off from the ground during take-off.
V_{NE}	Never Exceed Speed, being the speed that may not be exceeded at any time.
V_{NO}	Maximum Structural Cruising Speed, being the speed that should not be exceeded, except in smooth air, and then only with caution.
V_{REF}	Indicated airspeed at 15 m (50 ft) above threshold, which is not less than $1.3V_{so}$.
V_{ROT}	Rotation Speed, being the speed at which the aircraft should be rotated about the pitch axis during take-off (i.e. the speed at which the nose wheel is lifted off the ground).
V_S	Stall Speed, maximum weight, engine idling, flaps fully retracted.
V_{SO}	Stall Speed in landing configuration (flaps fully extended), MAUW, engine idling.
V_X	Best Angle of Climb Speed, being the speed (at MAUW, flaps fully retracted) which results in the greatest altitude gain over a given horizontal distance (i.e. highest climb angle).

V_Y	Best Rate of Climb Speed, being the speed (at MAUW, flaps fully retracted) which results in the greatest altitude gain over a given time period.

Meteorological terminology

ISA	International Standard Atmosphere.
QNH	The local pressure setting that if set on the subscale of an altimeter will cause the altimeter to indicate local altitude above mean sea level.
QFE	The local airfield pressure setting that if set on the subscale of an altimeter will cause the altimeter to indicate local height above airfield.

Engine terminology

CHT	Cylinder Head Temperature.
EGT	Exhaust Gas Temperature.
OHV	Overhead Valve.
RPM/ rpm	Revolutions per minute, being the number of revolutions per minute of the engine crank.

Airplane performance and flight planning terminology

Crosswind component	The velocity of the crosswind component during takeoff and landing.
g	The acceleration / load factor.
Landing run	The distance measured during landing from actual touchdown to the end of the landing run.
Landing distance	The distance measured during landing from clearance of a 15 m obstacle (in the air) to the end of the landing run.
Take-off distance	The take-off distance measured from the actual start of the take-off run to clearance of a 15 m (50 ft) obstacle (in the air).
Take-off run	The take-off distance measured from actual start of the take-off run to the wheel lift off point.
Usable fuel	The fuel available for flight planning.

Weight and balance terminology and symbols

Arm	Is the horizontal distance from the reference datum to the center of gravity of an item
CG	Center of Gravity, being the point at which the airplane, or equipment, would balance if suspended. Its distance from the reference datum is found by dividing the total moment by the total weight of the airplane
Datum	Reference datum is an imaginary vertical plane from which all horizontal distances are measured for balance purposes. (In the Sling this plane runs through the center point of the flat front face of the engine flange of the Rotax engine)
Empty weight	Is the weight of the airplane with engine fluids and oil at operating levels
MAC	Mean Aerodynamic Chord.
MAUW	Maximum All Up Weight
Maximum Landing Weight	Is the maximum weight approved for the landing touch down
Maximum Take-off Weight	Is the maximum weight approved for the start of the take-off run
Moment	Is the product of the weight (mass) of an item multiplied by its arm

W_R	Weight read from scale under right main wheel during aircraft weighing
W_L	Weight read from scale under left main wheel during aircraft weighing
W_N	Weight read from scale under nose main wheel during aircraft weighing
W_E	Aircraft empty weight
W_T	Aircraft total weight
W_{MAUW}	Aircraft maximum (allowed) all up weight

L_R	Right main wheel arm (aft of reference)
L_L	Left main wheel arm (aft of reference)
L_N	Nose wheel arm (aft of reference)
M_T	Total moment arm

Useful conversion factors

1 pound	=	0.4536 kilogram
1 pound per square inch	=	6.895 kilopascal
1 inch	=	25.4 millimeters
1 foot	=	0.3048 meter
1 statute mile	=	1.609 kilometers
1 nautical mile	=	1.852 kilometers
1 millibar	=	1 hectopascal
1 millibar	=	0.1 kilopascal
1 imperial gallon	=	4.546 liters
1 US gallon	=	3.785 liters
1 US quart	=	0.946 liter
1 cubic foot	=	28.317 liters
degrees fahrenheit	=	[1.8 x degrees celsius] + 32
degrees celcius	=	(degrees fahrenheit - 32) x (5/9)

1.6 Supporting documents

The following documents are regarded as supporting documents to this Pilot Operating Handbook:

1. For aircraft fitted with 912 ULS engines: latest revision / edition of the Operators Manual For Rotax® Engine Type 912 Series, Ref No.: OM-912.

2. For aircraft fitted with 912 iS engines: latest revision / edition of the Operators Manual For Rotax® Engine Type 912 i Series, Ref No.: OM-912 i.

3. Latest revision / edition of Rotax service instruction SI-912-016 or SI-912i-001, as applicable (to type of engine fitted).

4. MGL EFIS operator manual.

5. Operator manual for COM radio and transponder (if fitted) equipment fitted to the aircraft.

Reference should be made to these documents for operational guidelines and instructions. These should be incorporated into the normal and emergency procedures for the aircraft as applicable.

2. LIMITATIONS

2.1 Introduction

This section includes operating limitations, instrument markings and basic placards necessary for the safe operation of the Airplane Factory Sling LSA, its engine, systems and equipment.

2.2 Airspeed limitations

SPEED		KIAS	REMARKS
V_{NE}	Never exceed speed	135	Never exceed this speed in any operation.
V_{NO}	Maximum structural cruising speed	110	Never exceed this speed unless in smooth air, and then only with caution.
V_A	Maneuvering speed	91	Do not make full or abrupt control movements above this speed as this may cause stress in excess of limit load factor.
V_{FE}	Maximum flap extended speed	85	Never exceed this speed unless the flaps are fully retracted.
V_H	Maximum speed in level flight	118	The aircraft will not exceed this speed at MAUW in level flight.
V_S	Stall speed at MAUW	45	At maximum all up weight in the most forward CG configuration, with flaps fully retracted, engine idling, the aircraft will stall if flown slower than this speed.
V_{S0}	Stall speed with flaps	40	With full flap, maximum all up weight, engine idling, the aircraft will stall if flown slower than this speed.

2.3 Airspeed indicator markings

MARKING	KIAS	SIGNIFICANCE
White arc	40-85	Flap Operating Range (lower limit is V_{S0} at maximum weight, and upper limit is the maximum speed (V_{fe}) permissible with flaps deployed)
Green arc	45-110	Normal Operating Range (lower limit is V_S at maximum weight and most forward CG with flaps retracted and upper limit is maximum structural speed V_{NO})
Yellow arc	110-135	Maneuvers must be conducted with caution and only in smooth air
Red line	135	Maximum speed for all operations

2.4 Stall speed adjustment for turning flight or load factor

Stall speeds listed in Section 2 (this section) are listed for straight and level (non-turning) flight at load factor = 1 g and should be adjusted for turning flight or increased load factor:

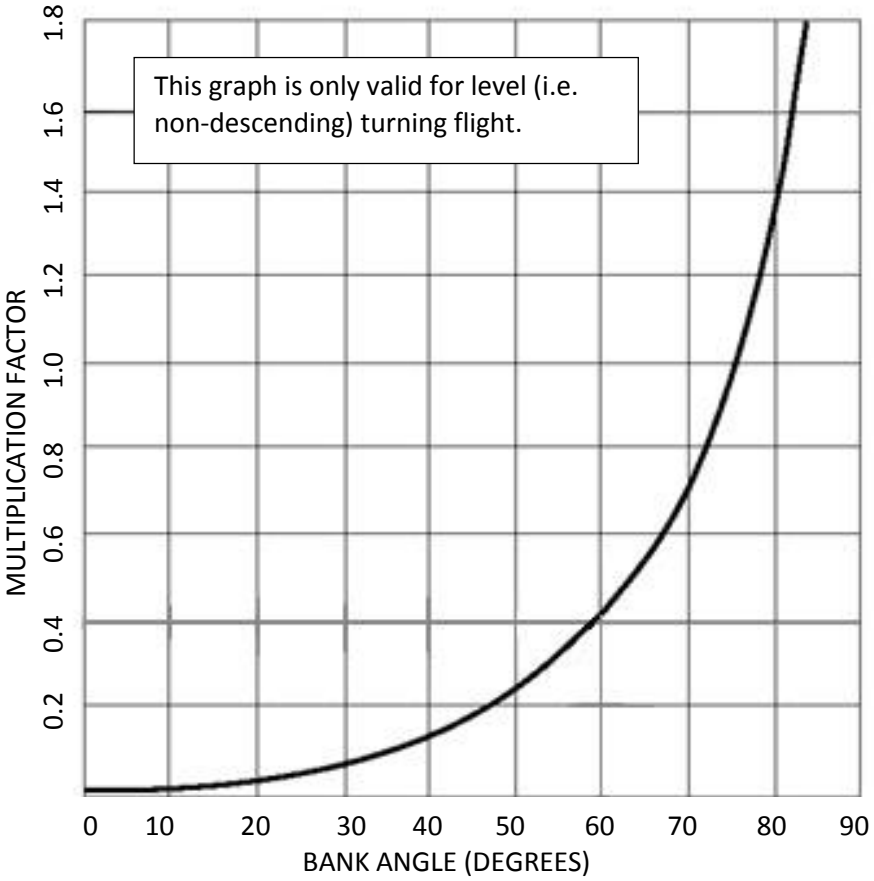

$V_T = V + (V \times \text{MULTIPLICATION FACTOR})$

- V is straight and level stall speed (at load factor = 1 g).
- V_T is stall speed in turn (non-descending).

$V_{ST} = V\sqrt{N}$

- V is straight and level stall speed (at load factor = 1 g).
- V_{ST} is stall speed due to increased load factor.
- N is (positive) load factor.

2.5 Crosswind and wind limitation (demonstrated)

Maximum demonstrated cross wind component for take-off and landing	15 kts.

2.6 Service ceiling

Service ceiling	12 000 ft.

2.7 Load factors

Maximum positive limit load factor	+4 g.
Maximum negative limit load factor	-2 g.
Maximum positive load factor with flaps	+2 g.
Maximum negative load factor with flaps	-1 g.

2.8 Weights

Maximum take-off weight	600 kg (1320 lb).
Maximum landing weight	600 kg (1320 lb).
Maximum total baggage weight	15 kg (77 lb).
Front luggage compartment maximum	15 kg (77lb).
Rear luggage compartment maximum	15 kg (55lb).

2.9 Center of gravity range

Datum	Center of front face of engine propeller flange (without propeller extension).
Reference (longitudinal leveling)	Upper surface of canopy sliders on cockpit side skins, with canopy open.
Reference (transverse leveling)	Upper surface of center spar cap under pilot and passenger seats.
Forward limit	1.635 m / 5.364 ft (20% MAC) aft of datum.
Rear limit	1.772 m / 5.814 ft (30.3% MAC) aft of datum.

WARNING
It is the pilot's responsibility to ensure that the airplane is properly loaded. Refer to section 6 for information on weight and balance

2.10 Prohibited maneuvers

The Sling is approved for normal maneuvers including the following:

- Steep turns not exceeding 60° bank.
- Lazy eights.
- Chandelles.
- Stalls (not including whip stalls).

WARNING
Aerobatics and intentional spins are prohibited

WARNING
Limit load factor would be exceeded by moving flight controls abruptly to their limits at a speed above V_A (91 KIAS – maneuvering speed)

2.11 Flight crew

Minimum crew for flight is one pilot seated on the left side.

2.12 Passengers

Only one passenger is allowed on board the aircraft (in addition to the pilot).

2.13 Kinds of operation

The Sling LSA, in standard configuration, is approved only for day VFR operation with visual contact with terrain. When equipped for night flight, the Sling LSA may be operated in night VFR conditions.

Minimum equipment required is as follows-

- Altimeter.
- Airspeed indicator.
- Compass.
- Fuel level indicators.
- Oil pressure indicator.
- Oil temperature indicator.
- Cylinder head temperature indicator.
- Outside air temperature indicator.
- Tachometer.
- Chronometer.
- First aid kit (compliant with national legislation).
- Fire extinguisher.

NOTE
Additional equipment may be required to fulfill national or specific requirements and may be fitted.

WARNING
Notwithstanding that installed equipment may include GPS and other advanced flight and navigational aids, such equipment may not be used as the sole information source for purposes of navigation or flight, save where specifically permitted by law. The airplane instrumentation is not certified and applicable regulations should be complied with at all times.

2.14 Engine limitations

Instruments reflecting engine parameters should in each case be marked / set to reflect the minimum and maximum figures.

For airplanes with the Rotax 912iS engine installed, refer to the supplement at the end of this manual.

Always refer to latest edition / revision of the engine Operators Manual for latest information regarding operating limitations.

ENGINE START AND OPERATION TEMPERATURE LIMITS (912 ULS)	
Maximum	50 °C (122 °F) (ambient temperature)
Minimum	-25 °C (-13 °F) (oil temperature)

ENGINE LOAD FACTOR (ACCELERATION) LIMITS	
Maximum	5 seconds at maximum -0.5 g.

ENGINE OPERATING AND SPEEDS LIMITS (912 ULS)		
Engine Model:		ROTAX 912 ULS
Engine Manufacturer:		Bombardier-Rotax GMBH
Power	Maximum take-off	73.5 kW (98.6 hp) at 5800 rpm, max. 5 min.
	Maximum continuous	69 kW (92.5 hp)at 5500 rpm
RPM	Maximum take-off	5800 rpm, maximum 5 minutes
	Maximum continuous	5500 rpm
	Idle	1 600 rpm (minimum)
Cylinder head temperature	Minimum	N/A
	Maximum	135 °C (275 °F)
	Normal	75 to 110 °C (167 to 230 °F)
Oil temperature	Minimum	50 °C (122 °F)
	Maximum	130 °C (266 °F)
	Normal	90 to 110 °C (194 to 230 °F)
EGT	Maximum	880 °C (1616 °F)
Coolant temperature	Maximum	120 °C (248 °F)
Oil pressure	Minimum	0.8 bar (12 psi) – below 3500 rpm
	Maximum	7 bar (102 psi) – permissible for short period during cold engine start
	Normal	2 to 5 bar (29 to 73 psi) – above 3500 rpm

Fuel pressure	Minimum	0.15 bar (2.2 psi)	**WARNING** Exceeding maximum allowed fuel pressure will override the float valves of the carburetors and lead to engine failure**.**
	Maximum	0.4 bar (5.8 psi)	
		0.5 bar (7.26 psi) (fuel pump S/N 11.0036 onwards)	

2.15 Other limitations

- No smoking is allowed on board of the airplane.
- VFR flights only are permitted.

WARNING
IFR flights and intentional flights under icing conditions are prohibited!

2.16 Flight in rain

When flying in the rain no additional steps are required. Airplane qualities and performance are not substantially changed. However, VMC should be maintained.

2.17 Limitation, warning, information and identification placards

The following limitation warning placards must be placed in or on the aircraft and positioned in plain view of the pilot, passenger or third person, as the case may be.

In a place visible to pilot and passenger:

PASSENGER WARNING
THIS AIRCRAFT WAS MANUFACTURED IN ACCORDANCE WITH LIGHT SPORT AIRCRAFT AIRWORTHINESS STANDARDS AND DOES NOT CONFORM TO STANDARD CATEGORY AIRWORTHINESS REQUIREMENTS

NO INTENTIONAL SPINS	FASTEN SEATBELTS

- If a ballistic rescue parachute is fitted, adjacent to the ballistic parachute activation lever:

EMERGENCY
BALLISTIC CHUTE
REMOVE LOCKING PIN BEFORE FLIGHT
PULL HANDLE TO FIRE

On the baggage space separator channel:

MAX TOTAL BAGGAGE WEIGHT – 35 KG / 77 LB

MAX FRONT SECTION 35 KG / 77LB

MAX REAR SECTION 25 KG / 55 LB

Adjacent to the fuel filler caps:

19.8 U.S. GALS.
91 OCT. MOGAS
100LL AVGAS

Adjacent to the filler hole in the main gear wheel pants (on each wheel):

TIRE PRESSURE
32 P.S.I

Adjacent to the filler hole in the nose gear wheel pants:

TIRE PRESSURE
26 P.S.I

On the inboard upper wing flap surface:

NO STEP

On the exterior of the fuselage adjacent to the entrance to the cockpit:

- On both pilot and passenger sides:

LIGHT-SPORT

- If a ballistic rescue parachute is installed:

WARNING
This aircraft is equipped with a ballistically-deployed emergency parachute system

If a ballistic rescue parachute is installed:

- On the exterior of the fuselage, adjacent to the egress point of the rescue parachute system:

DANGER EXPLOSIVE EGRESS
Rocket Deployed Parachute Egress Area
STAY CLEAR

- On the parachute rocket body, inside the rocket housing:

DANGER EXPLOSIVE ROCKET

On a fireproof metal plate attached to the exterior of the aircraft, aft of the cabin:

AIRCRAFT IDENTIFICATION
BUILDER: THE AIRPLANE FACTORY (Pty) Ltd
MODEL: SLING
SERIAL NO: ###
MADE IN SOUTH AFRICA

Note: ### represents the information applicable to the specific aircraft.

The airplane must be placarded to show the identity of:

- All fuses/circuit breakers.
- Magneto / ignition switches.
- All other switches.
- Choke (if fitted).
- Starter.
- Trim : Nose up and down.
- Flaps : Up and Down.

3. EMERGENCY PROCEDURES

3.1 Introduction

This section provides checklists and amplified procedures for coping with various emergencies that may arise.

Emergencies caused by aircraft or engine malfunction are extremely rare if proper pre-flight inspections and maintenance are practiced. However, should an emergency arise, the basic guidelines described in this section should be considered and applied as necessary to manage the problem.

In case of emergency the pilot should remember the following priorities –

1. Keep control of and continue flying the aircraft.
2. Analyze the situation.
3. Apply applicable procedures.
4. Inform air traffic control of the situation if time and conditions permit it.

3.2 Speeds for emergency operations

SPEED		KIAS	REMARKS
V_{BG}	Best Glide Speed	72	The speed (at MAUW, flaps fully retracted) which results in the greatest gliding (horizontal) distance.
	Speed for in-flight engine start	> 72	Recommended speed.

3.3 Engine related emergencies

3.3.1 Engine failure during take-off run

1. Throttle - idle.
2. Magnetos / ignition - off.
3. Brakes - apply as needed.
4. Master switch - off.

With airplane under control –

5. Fuel selector valve - off.
6. Auxiliary (electric) fuel pump - off (912 ULS).
   Electric fuel pumps (both) - off (912 iS).

3.3.2 Engine failure immediately after take-off

1. Speed - check.
2. Find a suitable place on the ground to land safely. The landing should be planned straight ahead with only small changes in direction not exceeding 45 degrees to either side.
3. Flaps - as needed (plan to land as slowly as possible).

Before touch down

4. Magnetos / ignition - off.
5. Master - off.
6. Fuel selector valve - off.
7. Electric fuel pump - off (912 ULS).
   Electric fuel pumps (both) - off (912 iS).

3.3.3 Engine irregularities in flight

3.3.3.1 Irregular engine rpm

1. Verify magneto switches - both on.
2 Verify throttle position.
3. Verify engine and fuel quantity indicators.
4. Electric fuel pump on (912 ULS).
   Auxiliary electric fuel pump on (912 iS).

If engine continues to run irregularly

5. Land as soon as possible.

3.3.3.2 Low fuel pressure (refer to engine limitations, Section 2 (912 ULS) or 912 iS engine supplement at end of manual)

1. Check fuel quantity indicator.
2. Switch electric fuel pump on (912 ULS).
   Switch auxiliary electric fuel pump on (912 iS).

If fuel pressure remains low

3. Decrease throttle setting if viable to do so.

If fuel pressure remains low

4. Land as soon as possible.

3.3.3.3 Low oil pressure (refer to engine limitations, Section 2 (912 ULS) or 912 iS engine supplement at end of manual)

1. Check oil temperature.

If oil temperature is high or increasing

2. Set throttle to a setting which gives an aircraft speed of 72 KIAS (most efficient speed).

If oil pressure remains low or temperature remains high or increasing

3. Land as soon as possible and remain vigilant for impending engine failure.

3.3.4 In-flight engine restart

1. Electric fuel pump	- on (912 ULS).
Electric fuel pumps (both)	- on (912 iS).
2. Fuel selector	- open (RIGHT).
3. Throttle	- set to middle position.
4. Master switch	- check on.
5. Magnetos / ignition	- check both on.
6. Starter	- engage.
7. Electric fuel pump	- off (912 ULS) (after positive start).
Auxiliary fuel pump	- off (912 iS) (after positive start).

If engine should fail to restart

8. Apply forced landing without engine power procedure, according to 3.5.1.

NOTE

It is possible that the propeller may continue to rotate if the airspeed remains above approximately 72 KIAS. In such circumstances no application of the starter switch may be required. If the propeller stops rotating increasing airspeed may result in it again starting to do so.

3.4 Smoke and fire

3.4.1 Engine fire on ground during engine start

1. Starter - release.
2. Fuel selector - close.
3. Electric fuel pumps (both) - off (912 iS).
4. Throttle - idle.
5. Magnetos / ignition - off.
6. Master switch - off.
7. Retrieve fire extinguisher if possible.
8. Exit the airplane.
9. Extinguish fire by fire extinguisher or call for a fire-brigade if you cannot do it.

3.4.2 Engine fire on ground with engine running

1. Cabin heat - close.
2. Fuel selector - close.
3. Electric fuel pumps (both) - off (912 iS).
4. Throttle - idle.
5. Magnetos / ignition - off.
6. Master switch - off.
7. Retrieve fire extinguisher if possible.
8. Leave the airplane.
9. Extinguish fire by fire extinguisher or call for a fire-brigade if you cannot do it.

3.4.3 Engine fire during take-off run

1. Throttle - idle.
2. Brakes - stop the aircraft.
3. Cabin heat - close.
4. Fuel selector - close.
5. Electric fuel pump(s) - off.
6. Magnetos / ignition - off.
8. Master switch - off.
9. Retrieve fire extinguisher if possible.
10. Exit the aircraft.
11. Extinguish the fire by fire extinguisher or call for fire services if unable to do so.

3.4.4 Engine fire in flight

1. Heating - close.
2. Fuel selector - close.
3. Throttle - full power.
4. Magnetos / ignition - switch off after the fuel in carburetors is consumed and engine has shut down.
5. Electric fuel pumps (both) - off (912 iS).
6. Choose landing area - choose emergency landing area.
7. Emergency landing - perform according to 3.5.1.
8. Retrieve fire extinguisher if possible.
9. Exit the airplane.
10. Extinguish fire by fire extinguisher / call for fire-brigade if you cannot do it.

NOTE
Estimated time to empty carburetors after fuel selector valve is closed is 30 seconds

WARNING
Do not attempt to re-start the engine!

3.4.5 Electrical fire in flight

An electrical fire is often characterized by white smoke and an acrid smell.

1. Master switch - off (see NOTE below).
2. Cabin heat - close.
3. Use the fire extinguisher (if possible).
4. Ventilate cabin if required / applicable (open air vents on instrument panel).
5. If fire is extinguished consider executing a precautionary landing / land as soon as practical.
6. <u>If fire does not extinguish land immediately</u>.

NOTE:

- If the location / source of the electrical fire can be determined and electrical power can be removed from that system / location by isolating / switching the system off, do so. This may alleviate the need to switch off the master switch.

- For aircraft equipped with a 912 iS engine, refer to the applicable supplement at the end of this manual, with regard to the Master switch.

The EFIS and associated equipment (iBox, RDAC etc.) can still be powered (to provide engine monitoring) from the EFIS back-up battery circuit when the master switch is off, provided that the EFIS system is not the location / source of the electrical fire.

3.4.6 Cabin fire

If the fire is electrical in nature follow the procedure for electrical fires in flight (3.4.5).

Alternatively:

1. Cabin heat - close.
2. Use the fire extinguisher (if possible).
3. Ventilate cabin if required / applicable (open air vents on instrument panel).
4. If fire is extinguished consider executing a precautionary landing / land as soon as practical.
5. <u>If fire does not extinguish land immediately</u>.

3.5 Emergency landings

Emergency landings are generally carried out in the case of engine failure during which the engine cannot be re-started. Other reasons for an emergency landing may, however, arise.

3.5.1 Engine-off emergency landing

1. Speed	- best glide speed of 72 KIAS.
2. Trim	- trim for best glide speed.
3. Landing location	- locate most suitable landing location, free of obstacles and preferably into wind.
4. Safety harness	- tighten.
5. Engine restart	- if time permits and if appropriate attempt to identify reason for engine failure and attempt restart.
6. Flaps	- extend as needed.
7. Communications	- report your location to third parties if possible.
8. Passenger	- brief.

Immediately before touchdown-

9. Fuel selector	- shut off.
10. Electric fuel pump	- off (912 ULS).
Electric fuel pumps (both)	- off (912 iS).
11. Magnetos / ignition	- off.
12. Master switch	- off.

WARNING

Flaps and elevator trim cannot operate without power on the main bus.
Make final flap selection before turning master switch off.

3.5.2 Precautionary landing

A precautionary landing is generally carried out in cases where the pilot may be disorientated, the aircraft has no fuel reserve or possibly in bad weather conditions.

1. Choose landing area, determine wind direction.
2. Report your intention to land and the landing location via radio.
3. Perform a low altitude pass into wind, over the right-hand side of the selected area, with flaps extended as required and thoroughly inspect the landing area.
4. Perform a circuit pattern.
5. Perform approach at increased idle with flaps fully extended.
6. Reduce power to idle when flying over the runway threshold and touch-down at the very beginning of the selected area.
7. After stopping the aircraft switch off all switches, shut off the fuel selector, lock the aircraft and seek assistance.

NOTE
Keep the chosen area in sight during precautionary landing.

3.5.3 Landing with a flat tire / damaged wheel

1. If a main landing gear tire is flat or a wheel is damaged, perform touch-down at the lowest practical speed with the aircraft slightly banked towards the serviceable tire / wheel. Maintain directional control during the landing run and keep the flat tire / damaged wheel off the ground, just above or very lightly on the ground, until the lowest speed possible.
2. If the nose wheel is damaged / flat perform touch-down at the lowest practical speed and hold the nose wheel off the ground as long as possible, via elevator control.

3.6 Recovery from unintentional spin

WARNING
Intentional spins are prohibited!

The aircraft is unlikely to enter an unintentional spin unless extreme control are applied.

Unintentional spin recovery technique:

1. Throttle - idle.
2. Lateral control - ailerons neutral.
3. Rudder pedals - full rudder in direction opposite to spin
4. Rudder pedals - neutralize rudder immediately when rotation stops.
5. Longitudinal control - neutralize control column or push forward if necessary to lower nose, then recover from dive ensuring V_{NE} and load factor limitations are not exceeded.

In the unlikely event that applied control inputs result in the aircraft entering a flat spin and the steps listed above do not result in recovery (following their application for a sustained period), the following technique may be implemented:

1. Throttle - set to full power.
2. Lateral control - ailerons neutral.
3. Rudder pedals - full rudder in direction opposite to spin.
4. Rudder pedals - neutralize rudder immediately when rotation stops.
5. Throttle - reduce to idle.
6. Longitudinal control - as per step 5 (longitudinal control) above.

3.7 Other emergencies

3.7.1 Vibration

If any abnormal aircraft vibration occurs:

1. Set engine speed to a setting where the vibration is least, if viable.
2. Land on the nearest airfield or perform a precautionary landing according to 3.5.2.

3.7.2 EFIS System Failure

If the EFIS system freezes, otherwise fails or reacts incorrectly in flight:

1. Maintain straight and level flight utilizing other instruments and ground references.
2. Switch the EFIS back-up battery and the EFIS main switch off (i.e. remove power from the EFIS).
3. Following a 3 second delay, apply power to the EFIS, maintaining straight and level flight at all times.
4. Maintain straight and level for at least another 15 seconds while the system boots up (when the system reboots, the navigation system(s) should remain active and any active routes (preceding the failure) should continue to be shown).

In case the system fails to re-boot properly:

5. Execute a precautionary landing at the first safe opportunity and have the instrument repaired.

3.7.3 Carburetor icing

Carburetor icing is evidenced through a decrease in engine power and an increase of engine temperatures.

To recover the engine power, the following procedure is recommended:

1. Speed - 75 KIAS
2. Throttle - 1/3 power.
3. If possible leave the (icing) area.
4. Increase the engine power gradually up to cruise conditions after 1 to 2 minutes.

If you fail to recover engine power, land on the nearest airfield (if possible) or, depending on the circumstances, perform a precautionary landing according to 3.5.2.

3.7.4 Alternator / charge system failure

For aircraft fitted with the 912 iS engine please refer to the supplement at the end of this manual.

Alternator failure (912 ULS) is evidenced by the illumination of the (red) alternator / charge warning light.

NOTE

The 912 ULS engine operation is independent from the aircraft main battery (except for start motor operation) / alternator. The engine will continue running after an alternator / charge system failure and / or with a depleted battery.

1. EFIS switch - off.
2. All non-critical electrical equipment - off.
   (navigation, strobe, taxi, landing lights etc.).
3. Auxiliary fuel pump - off.
4. Autopilot - off.
5. Set EFIS brightness to minimum.
6. Restrict / avoid the use of the elevator trim control. Restrict radio transmission to minimum / only that which is absolutely necessary.
7. Land as soon as possible.

3.7.5 Main bus power failure

Refer to paragraph 7.17, under **Main bus**, for a list of equipment affected by a loss of power to the main bus.

1. The EFIS should automatically switch over to the EFIS back-up battery supply , provided that the EFIS battery back-up switch is on (if not, switch on the EFIS battery back-up switch) and the back-up battery contains adequate charge.
2. Land as soon as possible.

4. NORMAL PROCEDURES

4.1 Introduction

This section provides checklists and recommended procedures for normal operation of the airplane.

4.2 Speeds for normal operation

Unless otherwise noted, the following speeds are based on a maximum weight of 600 kg (1320 lb).

SPEED		KIAS	REMARKS
V_x	Best Angle of Climb Speed	65	The speed (at MAUW, flaps fully retracted) which results in the greatest altitude gain over a given horizontal distance (i.e. largest climb angle).
V_Y	Best Rate of Climb Speed	72	The speed (at MAUW, flaps fully retracted) which results in the greatest altitude gain over a given time period.
V_{ROT}	Rotation Speed	40	The speed at which the aircraft should be rotated about the pitch axis during take-off (i.e. the speed at which the nose wheel is lifted off the ground).
V_{LOF}	Lift-off Speed	48	The speed at which the aircraft generally lifts off from the ground during take-off.
	Cruise Climb	75 to 90	
	Approach speed - long finals	65 to 75	
V_{REF}	Threshold crossing speed	≥ 52	Indicated airspeed at 15 m (50 ft) above threshold, which is not less than $1.3V_{SO}$.

4.3 Use of taxi, landing, strobe and navigation lights

Taxi lights should be used as appropriate and their use should be incorporated in the applicable (taxi and before take-off) procedures as required. Give consideration to taxi lights as an aid to enhancing the aircraft's visibility to other traffic / pedestrians / wildlife.

Landing lights should be used as appropriate and their use should be incorporated in the applicable (before take-off, take-off, climb, approach and landing) procedures as required. Give consideration to landing lights as an aid to enhancing the aircraft's visibility to other traffic / pedestrians / wildlife.

Strobe and navigation lights should be used as appropriate and their use should be incorporated in the following (normal) procedures as required. Give consideration to using the strobe light as an indicator / warning of imminent engine start (i.e. switch on the strobe before starting the engine).

4.4 Pre-flight check

Carry out the pre-flight inspection every day prior to the first fight. Pre-flight inspections must also be performed after any accident, incident, maintenance activity, assembly of any aircraft component or suchlike. Incomplete or careless inspection can result in an accident. Carry out the inspection following the instructions in the Inspection Check List.

NOTE
The word "condition" in the instructions means a visual inspection of surface for damage deformations, scratching, chafing, corrosion or other damages, which may lead to flight safety degradation.

Inspection check List

1. **Cabin**

- Magnetos / ignition	- off.
- Master switch	- on
- Fuel level indicator	- verify fuel quantity.
- Flaps	- move to full down position.
- Master switch	- off.
- Avionics	- verify condition.
- Control System	- visual inspection, free movement up to stops, verify function.
- Canopy	- attachment condition, clean.
- Cockpit	- check for loose objects.
- Fire extinguisher	- verify present and valid.
- Documentation	- verify present and valid.

2. Nose Section and Nose Gear

- Engine cowling condition	- check.
- Propeller and spinner condition	- check.
- Air intakes	- check.
- Radiators	- check.
- Engine mount and exhaust manifold condition	- check.
- Oil and coolant quantity check	- check.
- Visual inspection of fuel and electrical system	- check.
- Engine checks as per Rotax manual	- complete.
- Other actions according to the engine manual	
- Parachute cover	- if fitted check sealed and secure.
- Tire	- condition, inflation, wear.
- Wheels	- security, general condition.
- Chocks and tie-down ropes	- remove.
- Suspension and undercarriage	- check and test.

CAUTION

In case of long-term parking it is recommended to turn the engine over several times (Ignition OFF!) by turning the propeller in order to prime the lubrication system. Always handle the propeller blade area with the palm of your hand i.e. do not grasp only the blade edge with your fingers.

3. **Right Fuselage**

- Surface condition	- check.
- Cowling attachment	- check.
- Wing/fuselage fairings	- check.
- Empennage fairings	- check.
- Antenna/e	- check condition and security.

4. **Right Wing and Main Gear**

- Wheel fairing	- security, cracks.
- Wheel and brakes	- fluid leaks, security, general condition, tire condition, inflation and wear.
- Wheel strut	- condition, cracks.
- Leading edge condition	- check.
- Taxi / landing lights and lens	- check for cracks and condition.
- Fuel vent (underside of wing)	- unobstructed.
- Wing trailing edge	- check condition.
- Aileron	- freedom of movement, attachment, surface condition.
- Aileron hinges, control horn, bolts, pushrod	- secure, condition.
- Flap hinges, control horn, bolts, pushrod	- secure, condition.
- Wing tip	- check condition.
- Strobe/Nav light and lens	- check for cracks and condition.

WARNING
Physically verify the fuel level before each take-off to make sure you have sufficient fuel for the planned flight.

5. **Empennage**

- Tie-down rope - removed.
- Horizontal and vertical stabilizers- check condition.
- Elevator and tab - condition and movement.
- Rudder - condition and movement.
- Hinges, control horns, bolts, pushrod - condition and secure.

6. **Left Fuselage**

- Surface condition - check.
- Cowling attachment - check.
- Wing/fuselage fairings - check.
- Empennage fairings - check.
- Antenna/e - check condition and security.

7. **Left Wing**

- Wheel fairing	- security, cracks.
- Wheel and brakes	- fluid leaks, security, general condition, tire condition, inflation and wear.
- Wheel strut	- condition, cracks.
- Leading edge condition	- check.
- Taxi / landing lights and lens	- check for cracks and condition.
- Fuel vent (underside of wing)	- unobstructed
- Wing trailing edge	- check condition.
- Aileron	- freedom of movement, attachment, surface condition.
- Aileron hinges, control horn, bolts, pushrod	- secure, condition.
- Flap hinges, control horn, bolts, pushrod	- secure, condition.
- Wing tip	- check condition.
- Strobe/Nav light and lens	- check for cracks and condition.
- Pitot tube	- security, unobstructed, remove cover.

4.5 Engine start

Reference should be made to the operator's manual for the Rotax 912 iS or 912 ULS engine, as the case may be, for operational guidelines and instructions. These should be incorporated into the normal or emergency procedures as applicable.

CAUTION
Observe the temperature limits for engine start as specified in paragraph 2.14.

4.5.1 Before starting engine

1. Pre-flight inspection - completed.
2. Emergency equipment - on board.
3. Passenger - briefed.
4. Seats, seatbelt and harnesses - adjust and secure.
5. Brakes - on.

CAUTION
In case of long-term parking it is recommended to turn the engine over several times (Ignition / magnetos OFF!) by turning the propeller in order to prime the lubrication system. Always handle the propeller blade area with the palm of your hand i.e. do not grasp only the blade edge with your fingers.

4.5.2 Engine start

If a Rotax 912 iS engine is installed rather than a Rotax 912 ULS engine, please refer to the supplement at the end of this manual.

1. Master switch	- on.
2. EFIS back-up battery	- on, verify EFIS on and back-up battery voltage.
3. Magneto / ignition switches	- on.
4. Fuel selector	- open (RIGHT).
5. Electric fuel pumps (both)	-on (912 iS).
6. Choke (cold engine)	- pull to open and gradually release after engine start (912 ULS).
7. Throttle	- closed if choke used, cracked just open if not.
8. Propeller area	- clear of people and obstructions.
9. Starter	- engage (maximum 10 seconds).

Immediately after start-up:

10. Throttle	- adjust for smooth running (approximately 2000 rpm).
11. Oil pressure	- <u>increase within 10 seconds</u>.
12. EFIS switch	- on and verify battery charging.

13. Avionics master switch	- on.
14. Warm engine	- 2 000 rpm for 2 minutes, then 2 500 rpm until oil temp is 50 °C (122 °F).

CAUTION

The starter should be activated for a maximum of 10 seconds, <u>followed by 2 minute pause to allow the starter to cool</u>.

Verify the oil pressure, which should increase within 10 seconds. Increase the engine speed only if oil pressure is steady above 2 bar (29 psi).

At an engine start with low oil temperature continue to watch the oil pressure as it could drop again due to the increased resistance in the suction line. <u>Increase engine rpm only as required to keep oil pressure steady</u>.

To avoid shock loading, start the engine with the throttle lever set to idle or 10% open at maximum, then wait 3 seconds for engine to reach constant speed before accelerating engine rpm.

4.5.3 Engine warm up, engine check

Prior to an engine check, block the main wheels with wheel chocks or ensure that the park brake is on.

Initially warm up the engine at 2 000 rpm for approximately 2 minutes, then continue at 2 500 rpm until oil temperature reaches 50°C (122°F). The warm up period depends on ambient air temperature.

Verify both ignition circuits at 4 000 rpm (912 ULS). The engine speed (rpm) drop when either magneto is switched off should not exceed 300 rpm (912 ULS). The maximum difference (in rpm drop) between magnetos / ignition circuits should not exceed 115 rpm (912 ULS).

For verification of ignition circuits on an aircraft fitted with a 912 iS engine, refer to the applicable supplement at the end of this manual.

NOTE
Only one ignition circuit (at a time) should be switched on/off during ignition/magneto check.

Set maximum power for verification of maximum engine speed (rpm) with given propeller and engine parameters (temperatures and pressures).

Check acceleration from idle to maximum power.

If necessary, cool the engine at 3 000 rpm (approximately 2 minutes) before shutdown.

CAUTION
The engine check should be performed with the aircraft heading upwind and not on loose terrain (the propeller may suck grit which can damage the leading edges of blades).

4.6 Taxi

1. Flaps	- up.
2. Brakes	- off (carefully verify that the stop brake valve (park brake) is off).
3. Controls	- neutral position, or as required for wind.
4. Power and brakes	- as required.
5. Brakes	-verify.
6. Instruments	-verify.

Apply power and brakes as needed. Apply brakes to control movement on ground. Taxi carefully when wind velocity exceeds 15 knots. Hold the control stick in neutral position or as required, using conventional techniques.

4.7 Normal take-off

4.7.1 Before take-off

1. Controls	- verify full and free movement, directions.
2. Trim	- neutral.
3. Choke	- off (912 ULS).
4. Flaps	- as required (typically 1 notch).
5. Fuel quantity	- confirm.
6. Fuel selector	- open (RIGHT).
7. Electric fuel pump	- on (912 ULS).
Auxiliary electric fuel pump	- on (912 iS).
8. Circuit breakers	- all in.
9. Instruments	- verify all.
10 Altimeter	- set QNH / QFE.
11. Switches	-verify, as required.
12. Power and ignition	- verify magnetos at 4 000rpm, max diff 115 rpm, max drop 300 rpm (912 ULS).
13. Engine parameters	- verify temperatures, pressures, current/voltage.
14. Canopy	- closed and latched.
15. Safety harnesses	- on and tight.
16.Ballistic parachute (if fitted) handle lock pin.	- remove.

4.7.2 Take-off

1. Take-off power	- throttle fully forward (max. 5 800 rpm for 5 minutes).
2. Engine speed	- verify rpm (5 500 to 5 800 rpm).
3. Instruments within limits	- verify.
4. Rotate	- 40 KIAS.
5. Airplane lift-off	- 48 KIAS.
6. Wing flaps	- retract when speed of 65 KIAS is reached, at minimum height of 300 ft.
7. Electric fuel pump	- off (912 ULS)(minimum 300 ft)
Auxiliary electric fuel pump	- off (912 iS)(300 ft minimum)
8. Brakes	- apply briefly to stop wheel rotation.
9. Transition to climb.	

WARNING

Take-off is prohibited if:

- The engine is running unsteadily or intermittently.
- The engine parameters (instrument indications) are outside operational limits.
- The crosswind velocity exceeds permitted limits (see 2.5).

CAUTION

Ensure that engine oil temperature is above 50 °C prior to take off.

Climbing with engine at 5 800 rpm is permissible for 5 minutes. Thereafter a maximum continuous engine rpm of 5 500 applies.

4.8 Climb

1. Throttle	- Maximum take-off power, 5 800 rpm (for maximum 5 minutes). - Maximum continuous power, 5 500 rpm.
2. Airspeed	- V_X = 65 KIAS. - V_Y = 72 KIAS. - cruise climb = 75 to 90 KIAS.
3. Trim	- as required.
4. Instruments	-verify: - oil temperature and pressure. - cylinder temperature within limits.

CAUTION

If the cylinder head temperature or oil temperature approach their limits, reduce the climb angle to increase airspeed and thus fulfill the limits.

CAUTION

Climbing with engine at 5 800 rpm is permissible for 5 minutes. Thereafter a maximum continuous engine rpm of 5 500 applies.

4.9 Cruise

Refer to section 5 for recommended cruising figures.

WARNING

If a fuel lift pipe is exposed to air, the pump will suck air into the engine (from the empty tank) and engine failure will result. When one tank is empty, or close to empty, the fuel selector valve should be switched to the fullest tank.

Avoid operation below the normal operational oil temperature (90 to 110 °C / 194 to 230 °F).

4.10 Descend

Optimum glide speed - 72 KIAS.

WARNING

The fuel lift pipe in each fuel tank is situated adjacent to the lower inside wall of the tank. The aircraft should at no time be subjected to a sustained side slip towards a near empty fuel tank (i.e. - wing with near empty tank down) as, despite the baffling, this may have the consequence that the fuel runs towards the outer edge of the tank exposing the fuel lift pipe (to suck air), thereby starving the engine of fuel leading to engine stoppage. This poses a particular threat when at low altitude, typically prior to landing.

CAUTION

It is not advisable to reduce the engine throttle control lever to minimum on final approach or when descending from very high altitude. In such cases the engine can become over-cooled, although unlikely, and a loss of power may occur. Descent at increased idle (approximately 3000 rpm), speed between 65 to 85 KIAS and verify that the engine instruments indicate values within permitted limits.

4.11 Approach

1. Approach speed	
Long finals	- 65 to 75 KIAS.
Short finals	- ≥ 52 KIAS.
2. Electric fuel pump	- on (912 ULS).
Auxiliary electric fuel pump	- on (912 iS).
3. Fuel selector	- open (RIGHT).
4. Throttle	- as required.
5. Wing flaps	- extend as required.
6. Trim	- as needed.
7. Brakes	- off (carefully check that the brake stop-valve is off).

CAUTION

It is not advisable to reduce the engine throttle control lever to minimum on final approach and when descending from very high altitude. In such cases the engine can become over-cooled, although unlikely, and a loss of power may occur. Descent at increased idle (approximately 3000 rpm), speed between 65 to 85 KIAS and verify that the engine instruments indicate values within permitted limits.

4.12 Normal landing

4.12.1 Before landing

1. Throttle - as required.
2. Airspeed - ≥ 52 KIAS.
3. Wing flaps - extend as required.
4. Trim - as required.

4.12.2 Landing

1. Throttle - idle.
2. Controls - flare to minimum flying speed.
3. Touch-down on main wheels.
4. Apply brakes - as required (after the nose wheel touched down).

4.12.3 After landing

1. Engine speed - set as required for taxi.
2. Wing flaps - retract.

CAUTION

Rapid engine cooling should be avoided during operation. This especially happens during aircraft descent, taxi, low engine rpm or at engine shutdown immediately after landing. Under normal conditions the engine temperatures stabilize during descent and taxi at values suitable to stop the engine (by switching the ignition off) as soon as aircraft is stopped. If necessary (elevated engine operating temperatures), cool (for minimum 2 minutes) the engine at approximately 3 000 rpm to stabilize the temperatures prior to engine shut down.

4.13 Baulked landing procedures

1. Throttle	- full power (maximum 5 800 rpm for 5 minutes).
2. Trim	- as required.
3. Wing flaps	- retract to 50% as soon as possible and retract fully when reaching 65 KIAS (at 300 ft minimum height).
4. Electric fuel pump	- off (912 ULS) (300 ft minimum).
Auxiliary electric fuel pump	- off (912 iS) (300 ft minimum).
5. Trim	- adjust.
6. Repeat circuit pattern.	

4.14 Short field take-off and landing procedures

Not considered necessary. Ordinary short field procedures may be used if pilot deems it appropriate.

4.15 Engine shutdown

For Rotax 912 iS engine at least 5 minutes must elapse between landing and shutting off the engine.

1. Engine speed	- idle.
2. Instruments	- engine parameters within limits.
3. Avionics masterswitch	- off.
4. Electric fuel pump	- off (912 ULS).
Electric fuel pumps (both)	- off (912 iS).
5. Magnetos / ignition	- off.
6. Switches	- off.
7. EFIS	- off, battery back-up off.
8. Master switch	- off.
9. Fuel selector	- off.

CAUTION

Rapid engine cooling should be avoided during operation. This especially happens during aircraft descent, taxi, low engine rpm or at engine shutdown immediately after landing. Under normal conditions the engine temperatures stabilize during descent and taxi at values suitable to stop the engine (by switching the ignition off) as soon as aircraft is stopped. If necessary (elevated engine operating temperatures), cool (for minimum 2 minutes) the engine at approximately 3 000 rpm to stabilize the temperatures prior to engine shut down.

4.16 Aircraft parking and tie-down

1. Site	- Park the aircraft on as level an area as possible.
2. Ignition/ magnetos	-off.
3. Master switch	-off.
4. Fuel selector	-off.
5. Parking brake	- use as necessary.
6. Canopy	- close, lock as necessary.
7. Secure the airplane.	

NOTE

It is recommended that the parking brake (shutoff valve) be utilised for short-period parking only. If the airplane is to be parked for long periods it is advisable to use not only the parking brake, but also wheel chocks.

NOTE

Use the anchor eyes on the wings and fuselage rear section to secure the airplane. Move control stick forward and secure it together with the rudder pedals if high winds are expected. Make sure that the cockpit canopy is properly closed and locked.

5. PERFORMANCE

The presented data has been computed from actual flight tests with the aircraft and engine in good condition and using average piloting techniques.

If not stated otherwise, the performance stated in this section is valid for maximum take-off weight (600 kg/1320 lb) and under ISA conditions.

The performance shown in this section is valid for aircraft fitted with a ROTAX 912 ULS 73.5kW (98.6 hp) engine or a ROTAX 912 iS 73.5kW (98.6 hp) engine with a 72 inch, 3 blade, fixed pitch, Warp drive composite propeller.

5.1 Take-off and landing distance

Take-off distances:

Surface	Take-off run	Take-off distance over 15m (50 ft) obstacle
Concrete	120 m / 395ft	230 m / 755 ft
Grass	140 m / 460 ft	250 m / 820 ft

Landing distances:

Surface	Landing run distance (braked)	Landing distance over 15 m (50 ft) obstacle
Concrete	80 m / 265 ft	250 m / 820 ft
Grass	80 m / 265 ft	250 m / 820 ft

5.2 Rate of climb

Conditions: Max. continuous power : 5 500 rpm Weight : 600 kg / 1320 lb	Best rate of climb speed (V_Y)	Rate of climb
	KIAS	fpm
0 ft ISA	72	800
3 000 ft ISA	72	600
6 000 ft ISA	72	500
9 000 ft ISA	72	400

5.3 Cruise speeds (with fixed pitch propeller)

Altitude [ft ISA]	Engine speed [rpm]	KIAS	KTAS
100	4 500	81	82
	4 800	95	96
	5 000	101	102
	5 300	106	108
	5 500	112	114
3 000	4 500	72	76
	4 800	87	91
	5 000	98	104
	5 300	104	109
	5 500	108	114
6 000	4 500	65	73
	4 800	80	89
	5 000	90	100
	5 300	98	108
	5 500	101	115
9 000	4 500	63	73
	4 800	74	88
	5 000	87	99
	5 300	91	105
	5 500	94	108

5.4 Fuel consumption

Altitude	[ft ISA]	3 000				
Fuel quantity	[l]	150				
	[US gallons]	39.6				
Engine speed	[rpm]	**4 500**	**4 800**	**5 000**	**5 300**	**5 500**
Fuel consumption	[l/h]	14	16	18	20	21
	[US gallons]	3.7	4.2	4.8	5.3	5.5
Airspeed	[KIAS]	73	91	104	109	114
Endurance	[hh:mm]	10:40	9:20	08:20	07:30	07:10
Range (no reserve)	[nm]	781	853	866	817	815

5.5 Airspeed indicator system calibration

IAS [knots]	CAS [knots] (average)	CAS [knots] (this aircraft)
25	28	
30	33	
35	38	
40	44	
45	45	
50	50	
55	55	
60	60	
65	65	
70	70	
75	75	
80	80	
85	85	
90	90	
95	95	
100	100	
105	105	
110	110	
115	115	
120	120	
125	125	
130	130	
135	135	

6. WEIGHT AND BALANCE

This section contains weight and balance records and the payload range for safe operating of the Sling LSA.

6.1 Installed equipment list

- MGL multifunction glass cockpit instrument - Challenger iEFIS.
- MGL V6 COM radio.
- Mode S transponder (optional).
- Analogue altimeter, airspeed indicator, ball type slip indicator.
- Magnetic compass.
- Electric trim system.
- Electric flap actuator.

6.2 Center of gravity (CG) range

Operating CG range and allowable GC envelope

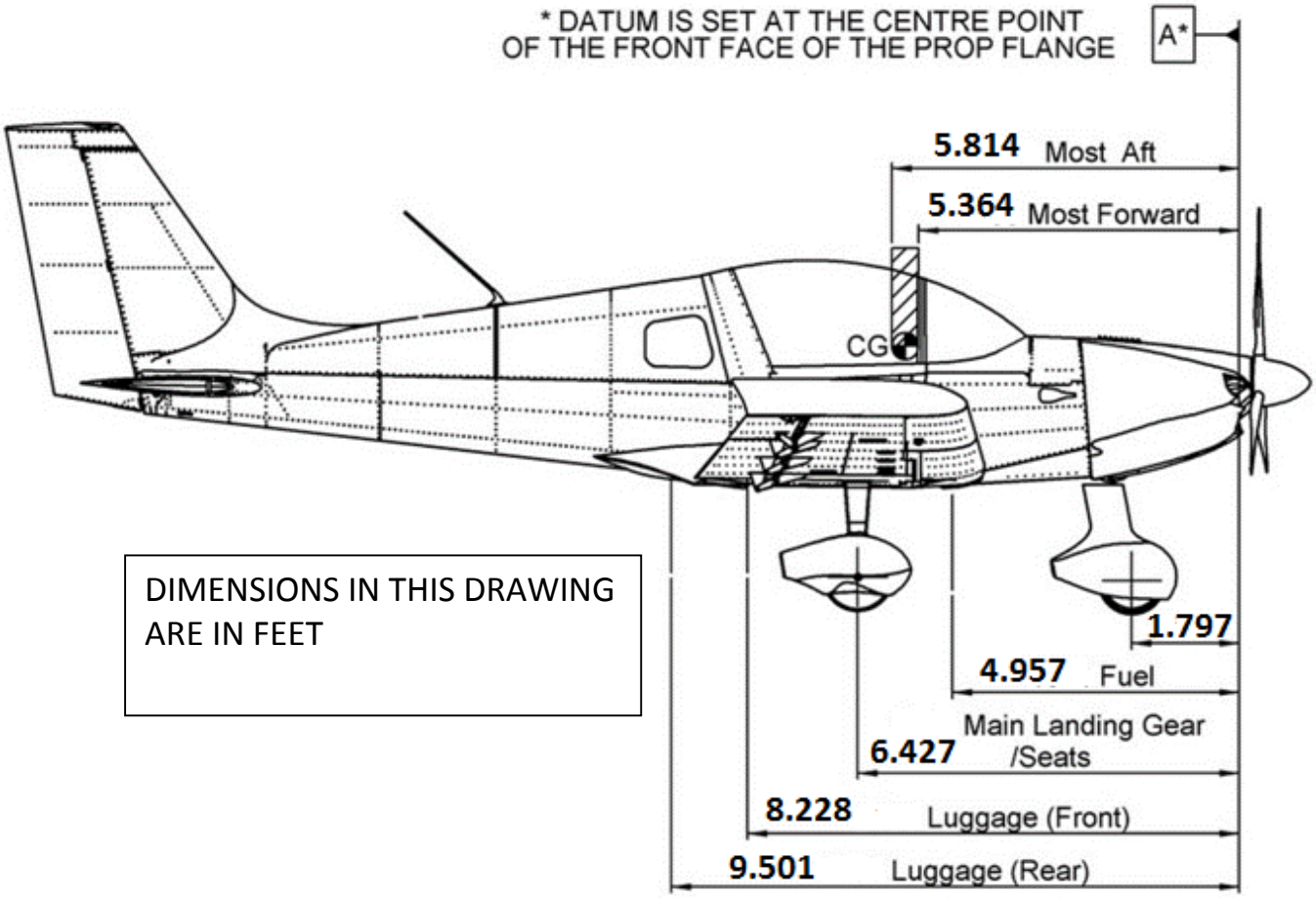

GC range is 1 635 mm (5.364 ft) to 1 772 mm (5.814 ft) aft of the reference datum (20 to 30.3% of MAC).

- The leading edge of the MAC is 1 366 mm (4.482 ft) aft of the reference datum.
- The MAC is 1 339 mm (4.393 ft).

WARNING
Aircraft CG and MAUW limitations must be adhered to at all times.

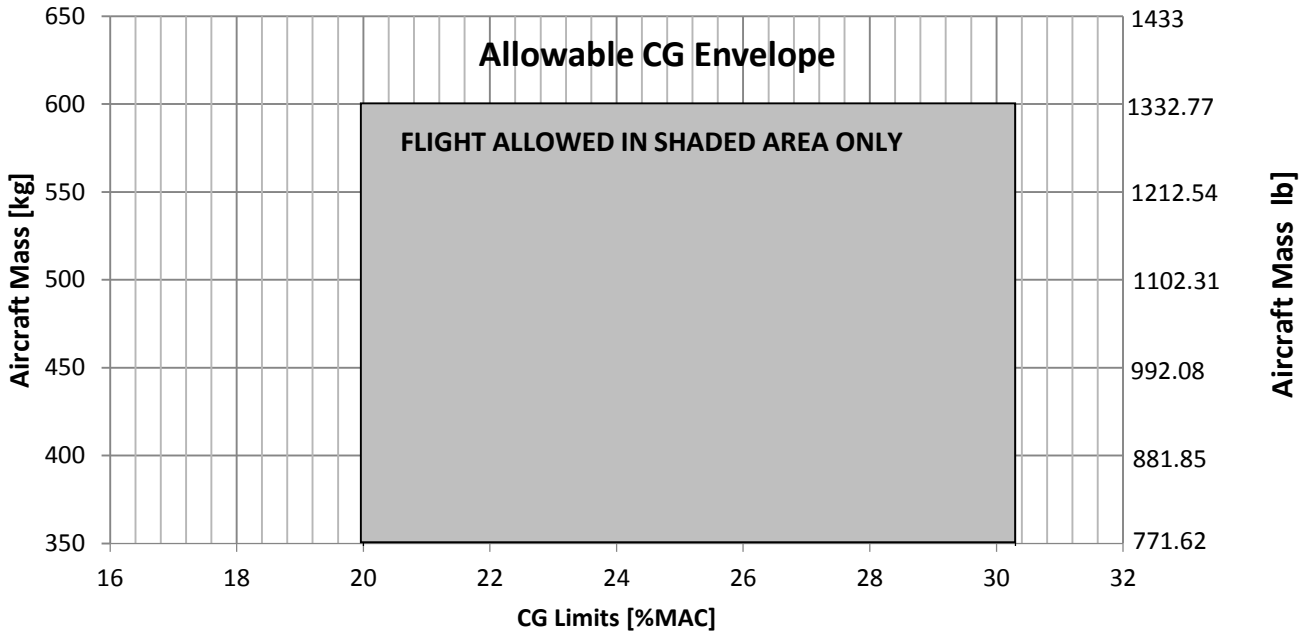

WARNING
Aircraft CG and MAUW limitations must be adhered to at all times.

WARNING
For each flight the most forward CG (i.e. with take-off fuel) and the most rearward CG (i.e. with landing fuel) must be calculated (to be within aircraft CG range / limits).

6.3 Determination of CG

Weight and balance report lists:

- Empty CG check.
- Forward CG check (example).
- Rear CG check (example).
- Blank CG form.

CG formulae:

$$\text{CG} = \frac{\text{Total moment arm}}{\text{Total Weight}}$$

$$\%\text{MAC} = (\text{CG} - 1366\text{ mm}) \text{ x } \frac{100}{1\,339\text{ mm}}$$

$$\%\text{MAC} = (\text{CG} - 4.482\text{ ft}) \text{ x } \frac{100}{4.393\text{ ft}}$$

WARNING
For each flight the most forward CG (i.e. with take-off fuel) and the most rearward CG (i.e. with landing fuel) must be calculated (to be within aircraft CG range / limits).

The aircraft empty CG is determined in a conventional manner by weighing the aircraft whilst it is standing level. (Refer to the aircraft maintenance manual for instructions on aircraft leveling and weighing).

6.4 Empty CG determination

	ITEM	WEIGHT [kg (lb)]	ARM [mm (ft)]	MOMENT (weight x arm) [kg.mm (lb.ft)]
Aircraft Empty CG	Right Main Wheel	W_R =	L_R = 1 959 (6.427)	
	Left Main Wheel	W_L =	L_L = 1 959 (6.427)	
	Nose Wheel	W_N =	L_N = 548 (1.797)	
	Computed empty CG	Empty weight: W_E = ……..kg (lb)	CG = …….. mm (ft) (……% MAC)	Aircraft moment :

Maximum all up (take-off) weight = 600 kg (1320 lb).

Maximum useful load (<u>example</u>):

$W_{max\ useful}$ = W_{MAUW} - W_E
= 600 kg (1320 lb) -370 kg (815 lb)
= 230 kg (507 lb)

6.5 Blank form and graph for use

	WEIGHT [kg (lb)]	**ARM** [mm (ft)]	**MOMENT** (weight x arm) [kg.mm (lb.ft)]
PILOT & PASSENGER		1 959 (6.427)	
BAGGAGE (FRONT)		2 508 (8.228)	
BAGGAGE (REAR)		2 896(9.501)	
FUEL		1 511 (4.957)	
ADD EMPTY VALUES			
TOTAL			
	W_T =		M_T =
			CG = %MAC

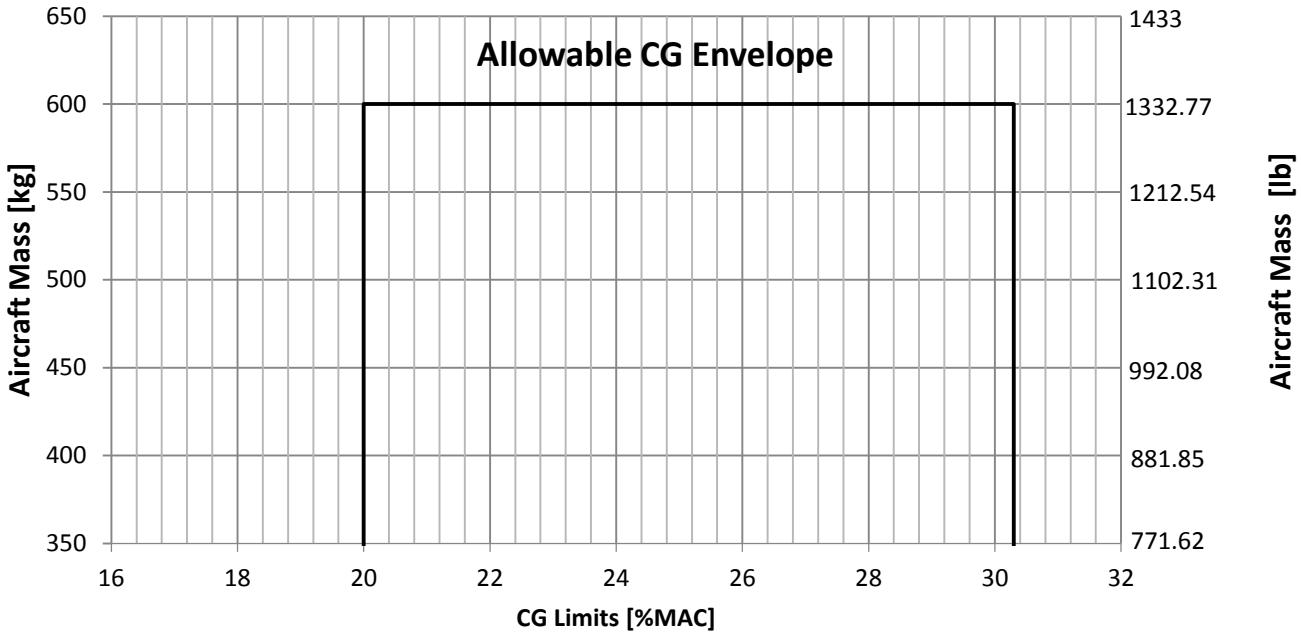
Allowable CG Envelope
Aircraft Mass [kg]
650
600
550
500
450
400
350
Aircraft Mass [lb]
1433
1332.77
1212.54
1102.31
992.08
881.85
771.62
16
18
20
22
24
26
28
30
32
CG Limits [%MAC]

7. SYSTEMS

7.1 Airframe

The airplane has an all-metal construction with single curvature stressed aluminum alloy skins riveted to stiffeners. Construction is of 6061-T6 aluminum alloy sheet metal riveted to aluminum alloy angles with high quality blind rivets. This high strength aluminum alloy construction provides long life and low maintenance costs, thanks to its durability and corrosion resistant characteristics. The wing has a high lift airfoil (NACA 4415) and is equipped with semi-slotted Fowler type flaps.

7.2 Control system / pilot controls

Control stick(s)

The aircraft is equipped with dual control sticks. The control sticks operate in the standard pitch and roll (elevator and aileron) configuration. See the picture below for control stick button allocation:

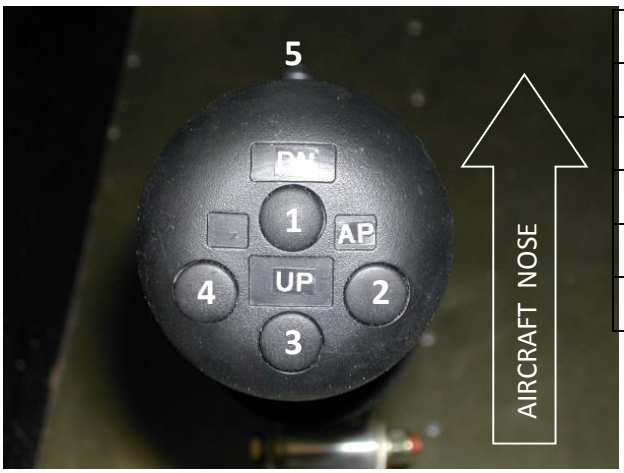

Button	Function
1	Trim down
2	Autopilot control
3	Trim up
4	Not allocated
5	Radio PTT

Rudder pedals / nose wheel steering

The aircraft is fitted with dual rudder pedals, which control the rudder and steer the nose wheel.

Brake lever and park brake shut-off valve

Refer to paragraphs 7.4 and 7.9.

Throttle lever and choke knob

Refer to paragraphs 7.9 and 7.15.

Fuel selector valve

Fuel tank feed selection is enabled by a red colored, three-position (RIGHT, LEFT, OFF) rotary fuel selector valve, located at the bottom center of the instrument panel / front of center console. Refer to the instrument panel layout in paragraph 7.10.

An additional knob must be activated to move the selection lever through a detent to the OFF position, preventing inadvertent closure (OFF selection) of the valve.

Ballistic parachute activation lever (if fitted)

The red colored activation lever is located at the bottom center of the instrument panel. Refer to the instrument panel layout in paragraph 7.10.

Inadvertent operation of the lever is prevented by a lock pin (tagged with a red flag). THIS PIN MUST BE REMOVED BEFORE FLIGHT.

Electrical equipment selection / control switches (912 ULS)

SWITCH / LABEL	FUNCTION	POSITION
MASTER / STARTER KEY SWITCH	Power disconnected from main bus	OFF
	Main bus connected to power	ON
	Engage starter motor	START
EFIS	Switch power (from main bus) to EFIS system on / off.	UP (ON) DOWN (OFF)
EFIS BKUP	Connects EFIS system to EFIS back-up battery supply.	
FUEL PUMP	Switch auxiliary fuel pump on / off.	
LAND	Switch landing lights on / off.	
TAXI	Switch taxi lights on / off.	
NAV	Select position (navigation) lights.	
STROBE	Select anti-collision (strobe) lights.	
AVIONICS	Switch power to radio and transponder (if fitted) on / off.	
AUTOPILOT	Switch power to autopilot servos on / off.	
MASTER	Switch power to main bus on / off.	
MAG A	Select Magneto A	
MAG B	Select Magneto B	

EFIS operation and control

EFIS function selection and control mechanisms are described in detail in the EFIS manufacturer supplied documentation. Please refer to such. Refer to paragraph 7.10 for additional information on operational use of the EFIS system.

Elevator trim

Elevator trim is electrically controlled by buttons on the control column. Refer to **Control stick(s)** for button allocation. Refer to paragraph 7.11.

Flap control

Wing flaps are electrically controlled and selected (for position) by a four-position rotary knob or a four-pushbutton selector located on the instrument panel (refer to paragraph 7.10). Refer to paragraph 7.11.

Selector Position	Degrees flap deflection
0	0°
1	10°
2	20°
3	30°

Cabin heat

Heated air (warmed by heat exchange with engine exhaust) can be selected via a selection knob located on the instrument panel. Refer to the instrument panel layout in paragraph 7.10. Hot air is selected by pulling out the knob.

7.3 Landing gear

The landing gear is a tricycle landing gear with a steerable nose wheel. The main landing gear uses a single continuous composite spring section.

7.4 Brake system

The aircraft braking system is typically a single hydraulic system acting on both wheels of the main landing gear through disk brakes. Activation is via a lever located on the cabin center console. Refer to paragraph 7.9. An intercept valve acts as a parking brake by stopping pressure relief. For braking to be operational the brake intercept valve must be off and the brake lever activated. The arrangement is apparent in the diagram below:

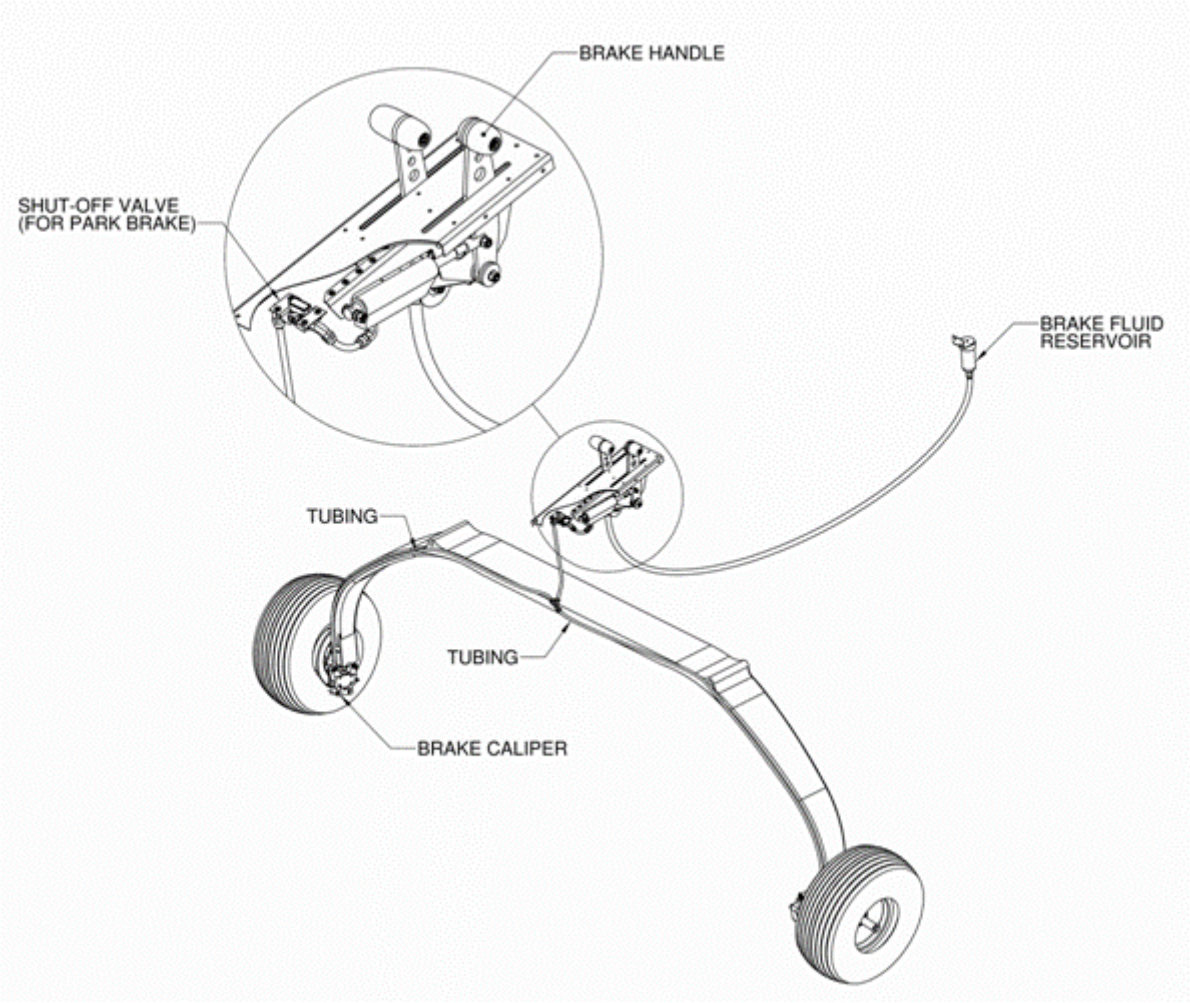

Brake system

A conventional, differential, foot controlled braking system may also be fitted as an option. In such cases each brake caliper is separately actuated by way of a master hydraulic brake servo fitted to the rudder pedal on the side of the airplane corresponding to the wheel on which the applicable caliper is located. The parking brake arrangement works in the same manner as with the hand actuated system.

7.5 Safety harness

The aircraft has side-by-side seating. Four point safety belts are provided for each seat. Seats can be adjusted backwards and forwards for comfort with forward movement slightly raising the seat height.

IMPORTANT: Ensure that the seat(s) is (are) securely locked into position after adjustment

NOTE
Prior to each flight, ensure that the seat belts are firmly secured to the airframe, and that the belts are not damaged. Adjust the buckle so that it assumes a central position relative to the body.

7.6 Baggage compartment

The baggage compartment comprises two sections positioned behind the seats and is designed to carry up to 15 kg (77 lb) in total. The baggage compartment comprises a narrow, slightly lowered front section and a higher, larger back section. Subject to the 15kg (77 lb) limitation, luggage may be loaded into the front or back section. Regardless of the manner in which baggage is loaded, it is the obligation of the pilot to ensure that the aircraft CG is within the permissible limits. All baggage must be properly secured.

7.7 Canopy

The airplane is equipped with a sliding canopy mechanism. External access to the cabin is from either side. Latching mechanisms are provided inside the cabin at the top of the roll-over bar in the center and outside on the center of the canopy.

WARNING
Ensure that the canopy / mechanism is securely latched into position before operating the aircraft.

7.8 Pitot and static systems

A pitot tube is located below the left wing. Pressure distribution to the instruments is through flexible plastic hoses. The tube incorporates a second inlet for measurement of angle of attack. The static port is located behind the instrument panel. Keep the pitot head clean to ensure proper functioning of the system. Ensure that the pitot tube cover is removed prior to every flight and that it is replaced after every flight.

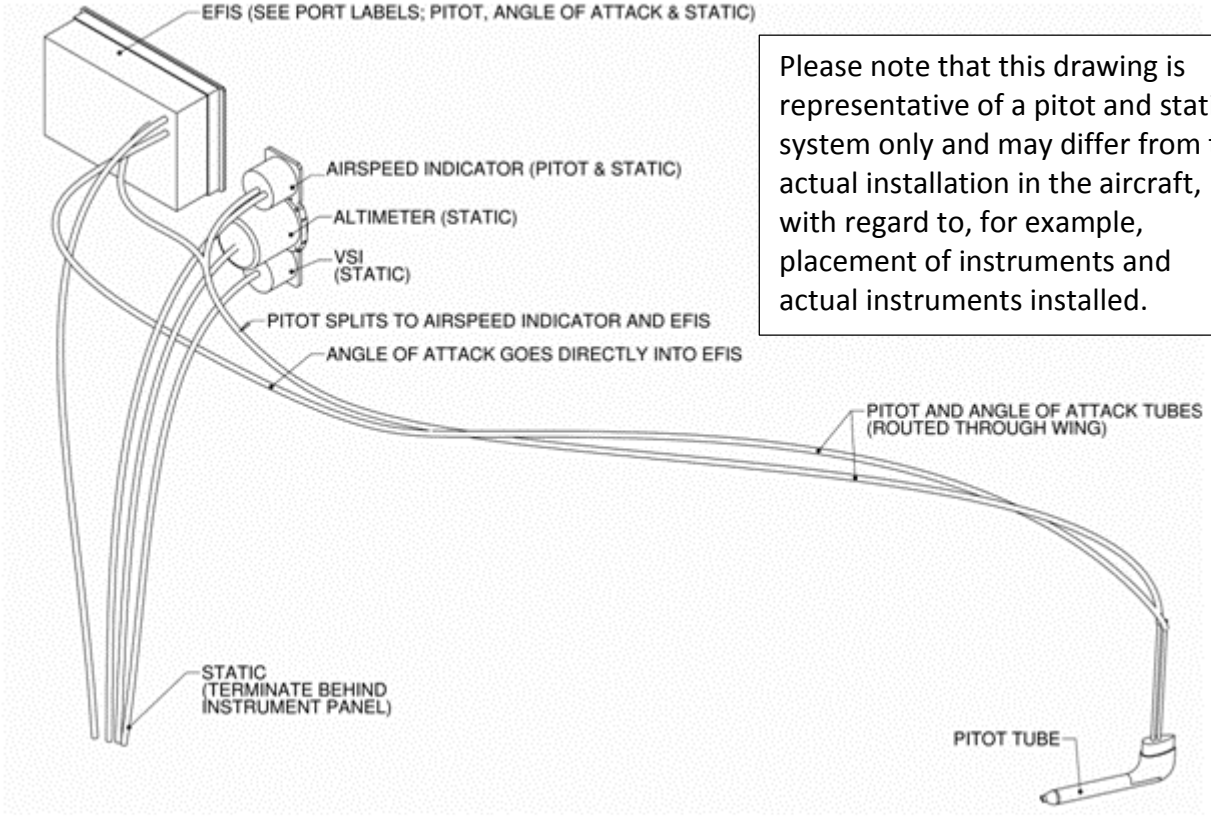

Please note that this drawing is representative of a pitot and static system only and may differ from the actual installation in the aircraft, with regard to, for example, placement of instruments and actual instruments installed.

Pitot and static system (example)

7.9 Cockpit layout

The basic cockpit layout is the same for all Sling LSA aircraft, notwithstanding that instrumentation may differ substantially. All airplanes contain the minimum instrumentation, but particular airplanes may contain substantial additional instrumentation. The basic cockpit layout is configured as in the diagram below.

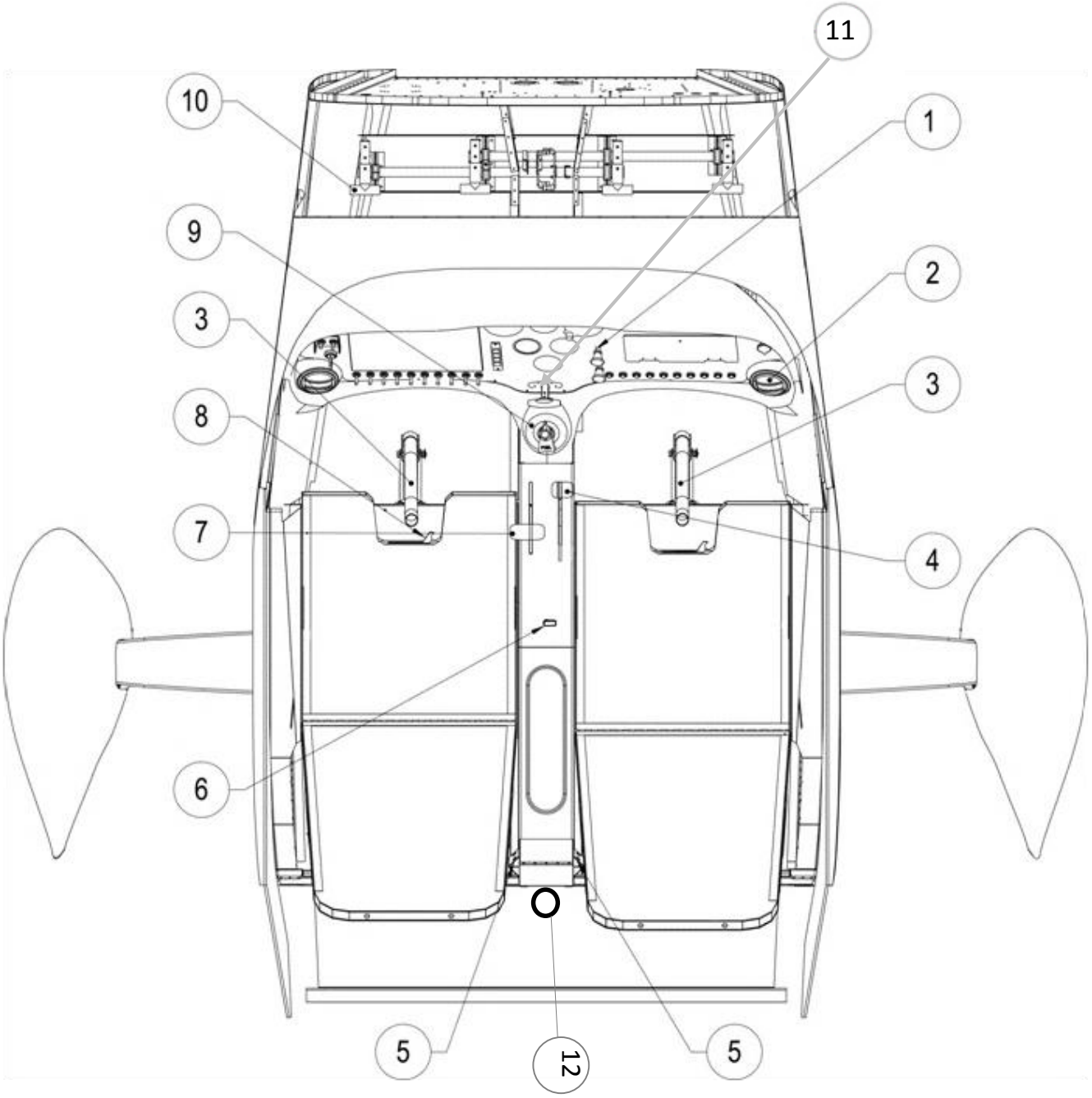

Cockpit layout

1	Instrument panel	7	Throttle
2	Air vent	8	Seat adjustment lever
3	Control stick (PTT on front of stick handle)	9	Fuel selector valve
4	Brake actuator (if footbrake not fitted)	10	Rudder pedals (incorporating brake if differential footbrakes are fitted)
5	Headset plugin sockets	11	Ballistic parachute operating lever
6	Park-brake actuator valve	12	Fire extinguisher

Cockpit layout key

If differential footbrakes are fitted the hand operated brake actuator on the center console will be absent.

Seats have a slide mechanism with a sideways moving unlocking lever in the center front of each seat in order to move the seat for comfort and to ensure that the rudder pedals can easily be reached by all pilots. Rudder pedals may also be adjusted through removal of a locking / setting bolt.

Air vents are located on the lower right and left sides of the instrument panel.

Baggage space is immediately behind the seats. A fire-extinguisher is held in place against the front retaining wall of the baggage space. An adjustable red interior cockpit light is positioned behind and between the pilot and passenger's heads, on rear fuselage front former structure.

7.10 Instruments and Avionics

The diagram below represents a standard instrument panel containing the required minimum instrumentation, together with typical back-up and additional instrumentation supplied with the aircraft. The instrument panel in any particular aircraft may differ from that illustrated in the diagram. It is the responsibility of the pilot to ensure that s/he is familiar with the instrumentation in the aircraft, its layout and its operation.

.

Standard instrument panel (912 ULS) (refer to key on next page)

NOTE: Rotax 912 iS equipped aircraft will have, in addition to the above, two switches for the electric fuel pumps in the fuel pump assembly.

1	Master switch and starter	13	Cabin heat activator
2	Ignition / “Magneto” switches	14	Cubby hole
3	Charge warning light (912 ULS)	15	12 V Power port / socket
4	MGL EFIS	16	Air vent
5	EFIS accessory warning light	17	Circuit breakers
6	Analogue airspeed indicator	18	Blank off / Ballistic recovery parachute activator handle (if fitted)
7	Analogue magnetic compass	19	Fuel selector valve
8	Analogue altimeter	20	Flap selector
9	MGL V6 COM radio	21	Electrical equipment switches
10	Blank off(s)	22	USB charge port
11	Analogue slip indicator		
12	Choke (912 ULS)		

Instrument panel key

Radio and Transponder

Power to the radio and transponder (if fitted) is provided via the main bus and activated via a single switch (for both) labeled AVIONICS, located on the instrument panel. Refer to paragraph 7.17.2.

EFIS system

MGL EFIS instruments, including the Voyager, Odyssey, Discovery, Explorer and Challenger, are multifunction "glass cockpit" instruments and typically incorporate a range of different instruments and functions. Although only the minimum specified instrumentation is required (see paragraphs 2.13 and 7.12 of this Pilot Operating Handbook), the full instrumentation provided by the EFIS will typically include:

- ASI (IAS as well as TAS and ground speed).
- ALT (and typically also height above ground).
- VSI.
- Compass.
- Attitude indicator.
- Turn coordinator.
- G meter (load factor meter).
- Clock, stopwatch and flight time record.
- Comprehensive mapping and navigation software and data, including GLS (GPS Landing System) capability.
- GPS.
- Autopilot (if servos are fitted).
- Full engine monitoring and management capacity including :
    - RPM indicator.
    - CHT and EGT indicators.
    - Oil temperature and oil pressure indicators.
    - Fuel level, fuel flow and fuel pressure indicator.
    - Hobbs and flight time recorder.
    - Voltmeter and <u>charge system</u> total <u>output</u> current indicator.

The EFIS installed in the aircraft is (can be) powered from two separate power sources:

- From the main bus, through a circuit breaker and a main selection switch (labeled EFIS) mounted on the instrument panel. Refer to paragraph 7.17.2.
- From a battery back-up circuit, via a selection switch (labeled EFIS BKUP) mounted on the instrument panel. Refer to paragraphs 7.17.2 and 7.17.3.

Operational use of the EFIS and EFIS back-up battery system

Use and set-up of the EFIS features are extensively described in the documentation supplied with the unit and will not be dealt with in this handbook. Refer to the supplied EFIS documentation.

Autopilot functionality is incorporated in the EFIS. Refer to paragraph 7.21 for additional information.

The EFIS is operated during flight with the EFIS back-up battery selection switch on at all times. This will ensure automatic switch-over of the EFIS to the EFIS back-up battery in the event that power is lost to the main bus.

In the event of a charge system failure:

- Switch the EFIS main switch off. This will allows the EFIS to switch over to (and be powered from) the EFIS back-up battery supply (provided that the EFIS battery back-up switch is on and the EFIS back-up battery contains adequate charge). Leaving the EFIS main switch on will cause the EFIS to be powered from the main bus, contributing (unnecessarily) to the discharge of the main battery.

- Set the EFIS screen brightness to the minimum acceptable for readability (to reduce current drain on the back-up battery).

WARNING
Users should desist from entering the EFIS setup pages during flight as changes to the setup may result in incorrect readings and/or warnings resulting in safety degradation

7.11 Flap and elevator trim systems

The aircraft is equipped with electric flaps and an electric elevator trim system. The flap motor is located in the cabin center console. The two wing flaps are interconnected via a torque tube, which is driven at a single point by the flap motor. Bar a failure in the linkage system, this prevents the flaps from being deployed (driven) to asymmetrical positions. Pilot control of the flap system is via a four-position rotary knob (electronic controller) located on the instrument panel. Refer to paragraphs 7.2 and the instrument panel layout in paragraph 7.10.

The flap controller is powered from the main bus. The flap controller in turn powers the flap motor, via a circuit breaker located on the instrument panel (refer to paragraph 7.17.2).

The trim motor is located in the port elevator and drives a trim tab (via a pushrod system) located on the elevator trailing edge. Pilot control is via buttons located on the control stick(s). Refer to paragraph 7.2 for button allocation.

In 912 ULS equipped aircraft the trim system is powered (via a circuit breaker located on the instrument panel) directly from the charge system output and / or from the main bus (provided the charge relay is energized / not failed). Refer to paragraph 7.17.1. In 912 iS equipped aircraft the trim system is powered from the main bus (refer to the circuit diagrams in the applicable supplement at the end of this manual).

WARNING

The flap system becomes non-operational with loss of power to the main bus. The elevator trim remains operational with loss of power to the main bus, provided that the charge system remains operational.

On 912 iS equipped aircraft, the elevator trim becomes non-operational with loss of power to the main bus.

7.12 Minimum instruments and equipment required for flight

The following minimum instrumentation and equipment is required for day VFR flight:

- Altimeter.
- Airspeed indicator.
- Compass.
- Fuel gauges.
- Oil pressure indicator.
- Oil temperature indicator.
- Cylinder head temperature indicator.
- Outside air temperature indicator.
- Tachometer.
- Chronometer.
- First aid kit (compliant with national legislation).
- Fire extinguisher.

WARNING

Notwithstanding that installed equipment may include GPS and other advanced flight and navigational aids, such equipment may not be used as the sole information source for purposes of navigation or flight, except where specifically permitted by law. The aircraft instrumentation is not certified and applicable regulations should be complied with at all times.

7.13 Engine

The Rotax 912 ULS engine is a 4-stroke, 4-cylinder, horizontally opposed, spark ignition engine with one central camshaft-push-rod-OHV. The engine features liquid cooled cylinder heads with air cooled cylinders. It utilizes dry sump forced lubrication and has a dual contactless capacitor discharge magneto type ignition system. The engine is fitted with an electric starter, AC generator (alternator) and mechanical fuel pump. A back-up electrical fuel pump is fitted. Propeller drive is via reduction gear with integrated shock absorber. The engine will continue to run after an alternator and / or battery failure.

See the manufacturer documentation and applicable supplements to this Pilot Operating Handbook for applicable information should the airplane be fitted with a Rotax 912 iS engine.

7.14 Cooling system (912 ULS / 912 iS)

Cylinders are air cooled.

Cylinder heads are liquid cooled via a closed circuit system with an expansion tank. A camshaft driven coolant pump circulates coolant from a radiator through the cylinder heads, then through an expansion bottle and back to the radiator.

The expansion tank is closed by a pressure cap. At temperature rise of the coolant an excess pressure valve in the expansion tank opens and coolant flows (via a hose) at atmospheric pressure to an overflow bottle mounted on the firewall. When cooling down the coolant in the overflow bottle is sucked back into the cooling circuit.

Refer to the latest revision / edition of the applicable Rotax engine operator and maintenance manuals.

Coolant type (912 ULS)

For aircraft fitted with the 912 iS engine refer to the supplement at the end of this manual.

Either water-free propylene glycol based coolant concentrate or conventional ethylene glycol based coolant and distilled water mixture (1:1 mix) can be used. Refer to the latest edition / revision of the ROTAX 912 ULS engine operator manual and the latest revision of Rotax service instruction SI-912-016.

WARNING

Waterless coolant (propylene glycol based) may not be mixed with conventional (ethylene glycol/water) coolant or with additives! Non observance can lead to damage to the cooling system and engine.

Coolant liquid volume

Coolant volume is approximately 2.5 liters (2.5 Quarts).

7.15 Throttle and choke

Engine power is controlled by means of a hand operated throttle lever situated on the cabin center console. Refer to paragraph 7.9. Forward movement of the throttle lever increases engine power output and backward movement decreases engine power output.

A choke knob (912 ULS equipped aircraft only) is positioned in the left center of the instrument panel. Refer to paragraph 7.10. Pulling out the choke knob activates the choke mechanism.

Both controls (throttle and choke) are mechanically connected via cables to activators (levers) on the carburetors.

7.16 Carburetor pre-heating/anti-ice

N/A.

7.17 Electrical System

Refer to the applicable supplement at the end of this manual for aircraft equipped with a 912 iS engine.

Included are wiring diagrams for those parts of the aircraft's electrical system which are relevant / can aid the pilot's understanding of the aircraft's systems and their use with respect to the operational procedures described in this manual. Refer to paragraphs 7.17.1, 7.17.2 and 7.17.3.

For information about the particular engine's integral electrical system (alternator, ignition etc.) please refer to the applicable Rotax 912 ULS / 912 iS documents.

Charge system

For aircraft fitted with the 912 iS engine refer to the applicable supplement at the end of this manual.

Refer to paragraph 7.17.1. The alternating current (AC) output of the engine driven alternator is routed to a rectifier / regulator where it is converted (rectified) and regulated, to provide direct current (DC) output available to the aircraft systems (e.g. to charge the main battery). Charge system output is approximately 13.5 to 14 V DC (from 1000 ±250 rpm and higher).

The charge system output is connected to the battery / main bus via a charge relay. Refer to paragraph 7.17.1. The charge relay coil is powered from the main bus (i.e. needs power from the main bus to remain energized / closed).

Loss of power to the main bus will result in the charge relay de-energizing and disconnecting the charge system output from the battery / main bus.

Failure (i.e. with the relay contact opening) of the charge relay will disconnect the charge system from the battery / main bus. The main bus / system voltage (indication on EFIS) could show a reduced reading.

Alternator failure indication

For alternator failure indication / indicators on 912 iS equipped aircraft please refer to the applicable supplement at the end of this manual.

For aircraft equipped with a 912 ULS engine the electrical system also incorporates an AC generator (alternator) / charge warning light (labeled CHARGE) located on the upper left side of the instrument panel (refer to paragraph 7.10). The light should illuminate if there is an AC generator (alternator) failure. The main bus / system voltage (indication on EFIS) could show a reduced reading.

Main battery

The 12 V main battery is mounted on the engine side of the firewall.

Main bus

Refer to the applicable supplement at the end of this manual for aircraft fitted with a 912 iS engine.

When power to the main bus is unavailable / fails the following equipment becomes non-operational:

1 Auxiliary (electric) fuel pump (912 ULS).
2 Flaps.
3. Autopilot (i.e. the autopilot servos).
4. Radio.
5. Transponder (if fitted).
6. Cabin light(s).
7. Strobe, navigation and taxi lights.
8. EFIS (unless powered by the EFIS battery back-up circuit)
9. The charge relay is de-energized and disconnects the charge system from the battery (912 ULS). Refer to paragraph 7.17.1.

With regard to the above:

1. The EFIS and related equipment (iBOX, RDAC) can be operated via the EFIS back-up battery circuit, provided that the circuit is switched on and the back-up battery contains adequate charge.

EFIS back-up battery / circuit

The 12 V EFIS back-up battery is mounted on the cabin side of the firewall, under the instrument panel. The EFIS back-up circuit can be operated independently from the main bus (i.e. with power to the main bus unavailable).

Master and starter switch(es)

See the applicable supplement at the end of this manual with regard to the Master / starter switch(es) on 912 iS equipped aircraft.

The master switch and starter switch(es) are incorporated into a key switch mounted on the instrument panel. Refer to paragraphs 7.10, 7.17.1 and 7.17.2.

The master / starter switch provides the following functionality:

- Connects the main bus to the 12 V main battery / charge system.
- Activates the starter motor.

Ignition Switches

Two ignition / magneto switches are located on the left hand side of the instrument panel. Refer to paragraph 7.10.

Both ignition / magneto switches should be ON to operate the engine.

NOTE

The engine (912 ULS / 912 iS) ignition system is independent of the aircraft electrical system (except for starter motor operation) and will operate even with the master switch and / or any circuit breaker(s) off. The 912 iS engine requires adequate power supply to at least one electrical fuel pump to remain operational (to prevent fuel starvation).

Avionics / electrical equipment switches

Refer to paragraph 7.17.2. Lever type switches are switched UP for activation (i.e. ON). Optional equipment, switches and / or fuses are subject to change or installed as requested. Refer to the Aircraft Equipment List.

Circuit breakers

Circuit breakers are push-to-reset (i.e. push in) for restoring / supplying electrical power to their corresponding electrical circuits. Refer to paragraphs 7.17.1 and 7.17.2. Circuit breakers are located on the instrument panel. Refer to paragraph 7.10.

7.17.1 Charge system / start system / electric fuel pump wiring diagram (912 ULS)

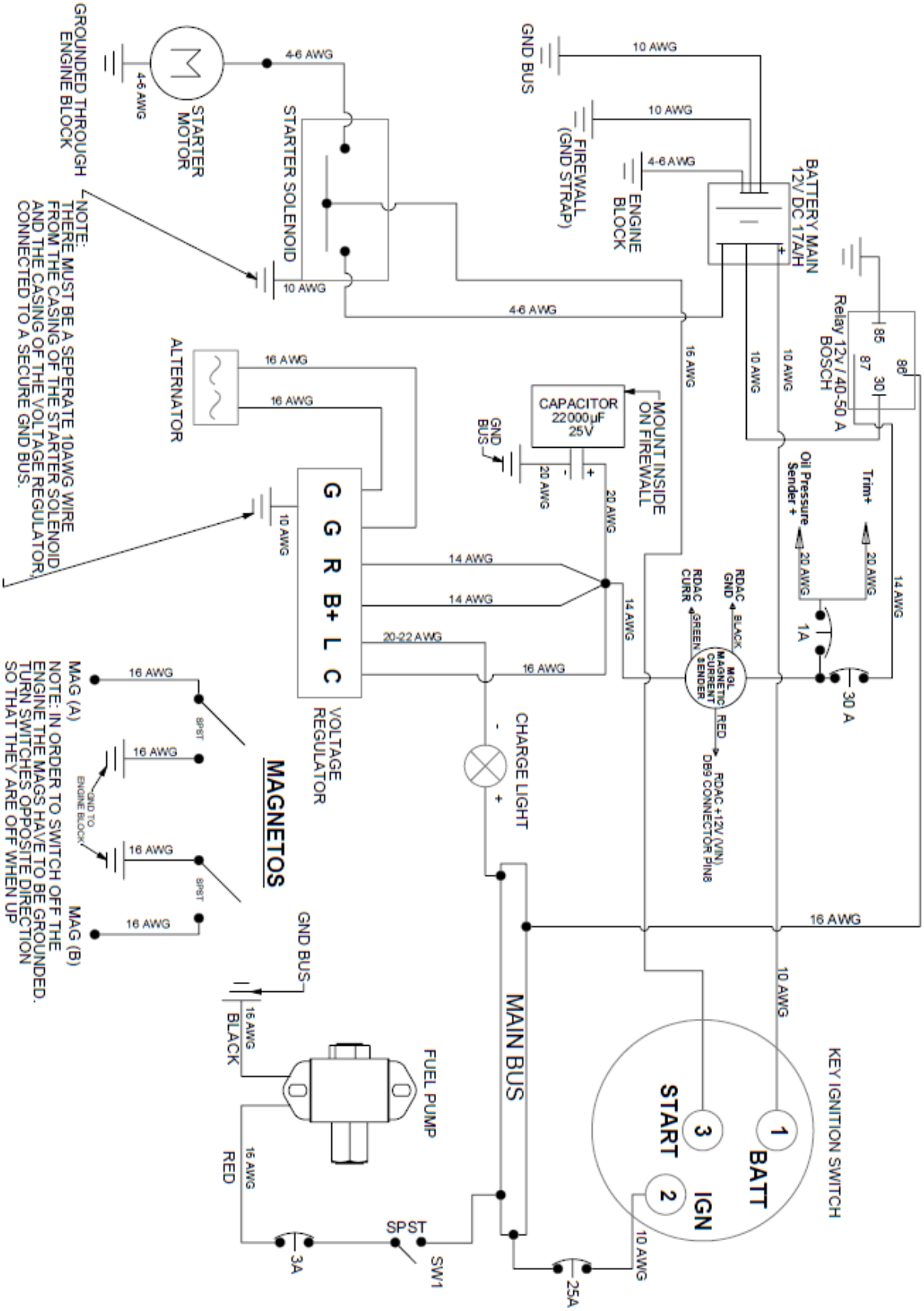

7.17.2 Switches and circuit breakers wiring diagram (912 ULS)

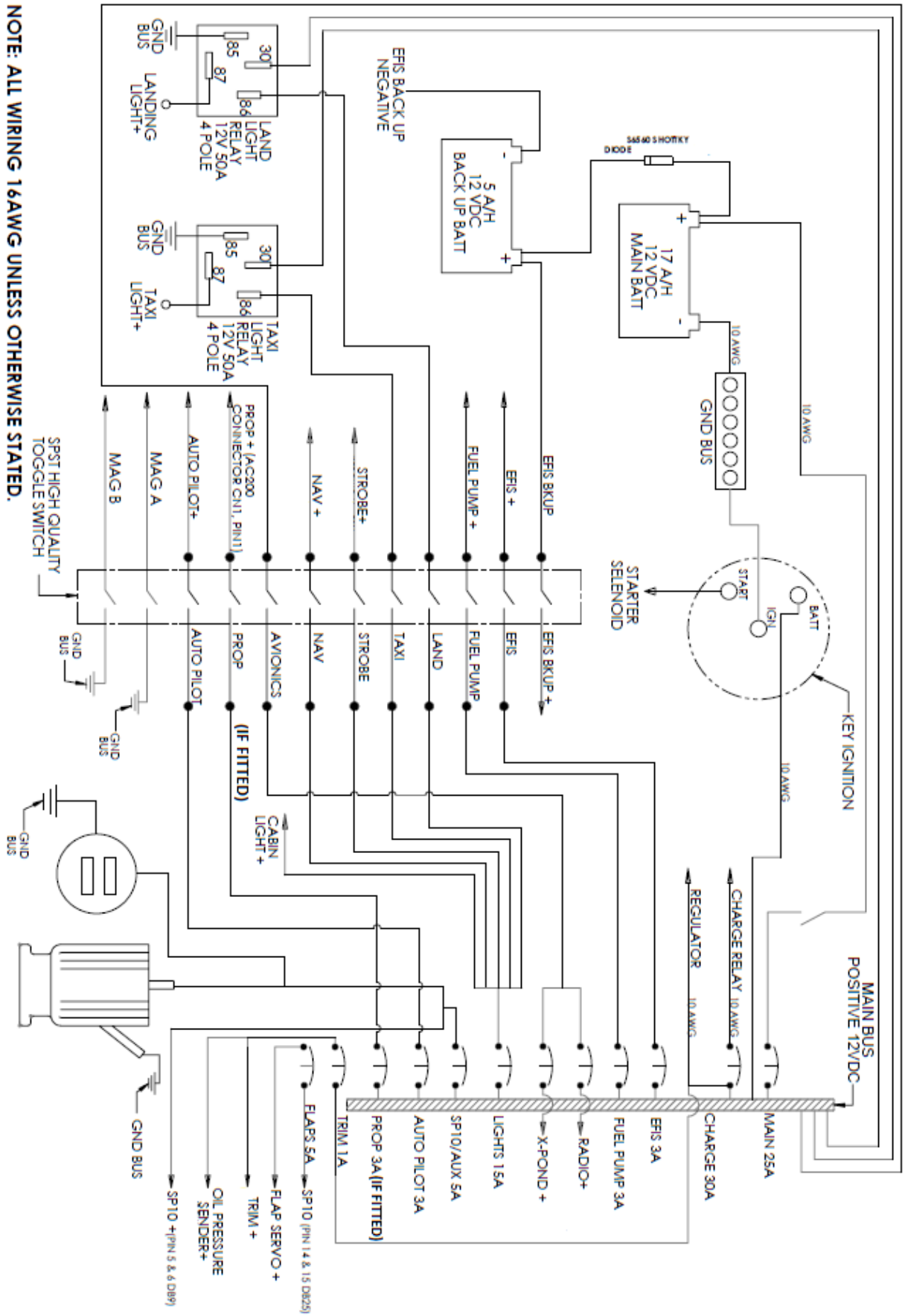

7.17.3 EFIS back-up circuit / battery back-up wiring diagram

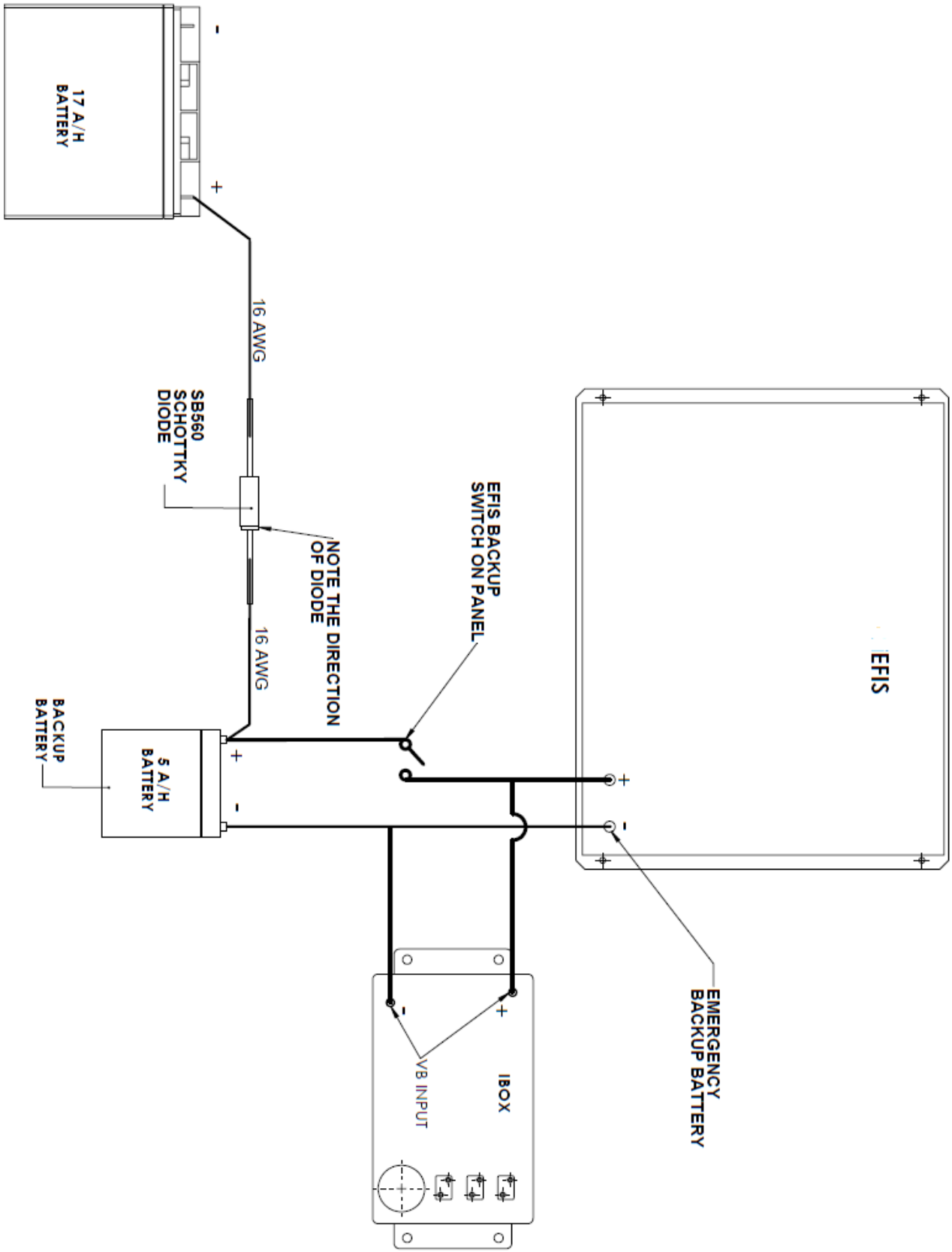

7.18 Propeller

The propeller is a Warp Drive, 72 inch, composite, ground adjustable, 3 blade composite propeller or a Whirlwind, 70 inch, composite, ground adjustable, 3 blade propeller.

NOTE
For technical data refer to documentation supplied by the propeller manufacturer.

7.19 Fuel system

The airplane has a fuel tank located in the inside leading edge of each wing. Each tank is equipped with a vent (underneath wing) and finger screen (on tank outlet / fuel pick-up). A drain valve is located in the lowest point of each tank. Each tank outlet leads to a fuel selector valve situated on the central console in the cockpit. Fuel return lines return excess fuel supplied by the fuel pump to the fuel tank. The system is configured as in the diagram below.

Volume of each wing tank is 75 liters (19.8 US gal), (73 liters / 19.28 US gal useable).

WARNING
The fuel lift pipe in each fuel tank is situated adjacent to the lower inside wall of the tank. The aircraft should at no time be subjected to a sustained side slip towards a near empty fuel tank which is in use (i.e. wing with near empty tank down) as, despite the baffling, this may have the consequence that the fuel runs towards the outer edge of the tank exposing the fuel lift pipe to suck air, thereby starving the engine of fuel leading to engine failure. This poses a particular threat when at low altitude, typically prior to landing.

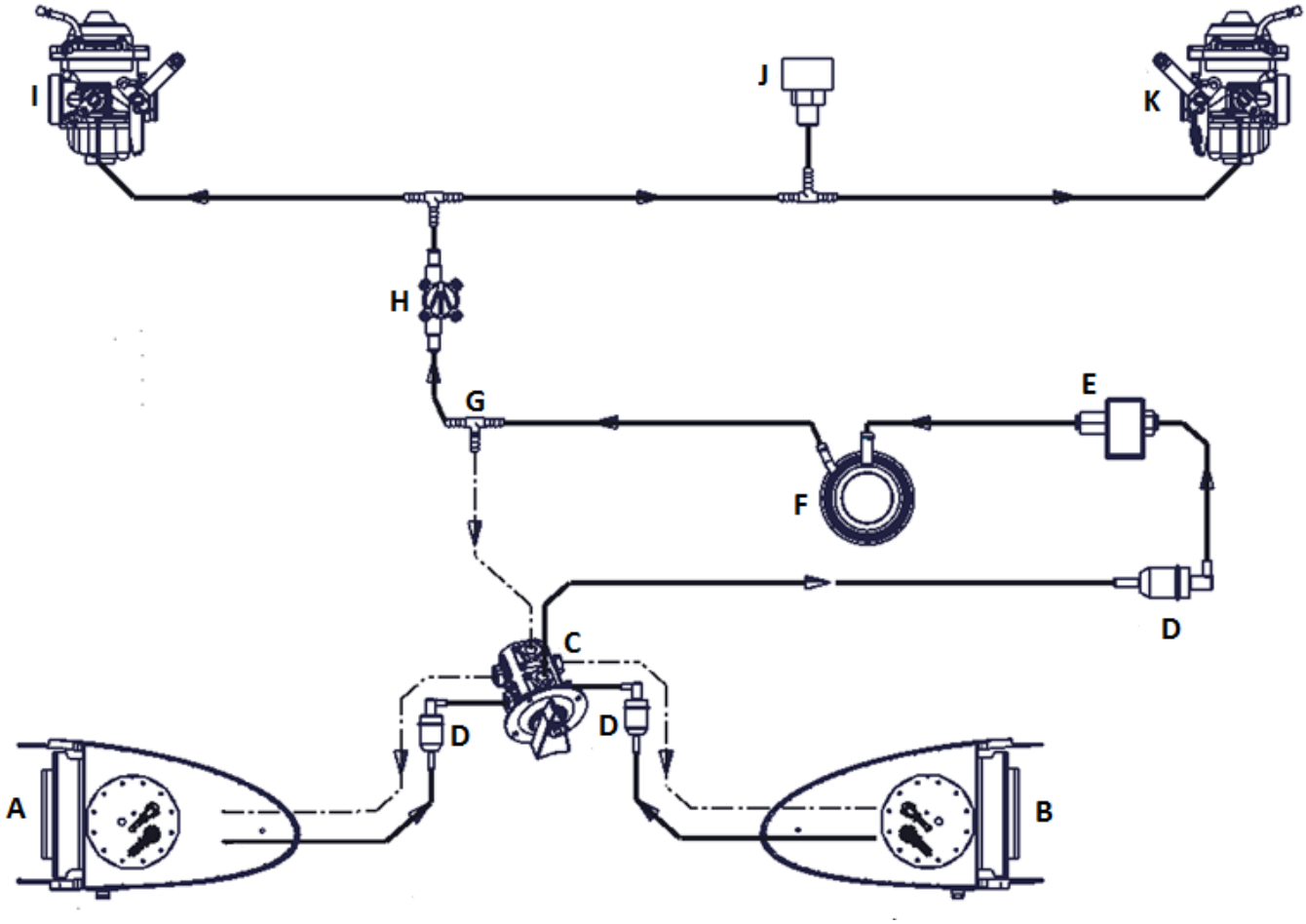

A	Port (left) fuel tank	G	Barbed T-piece
B	Starboard (right) fuel tank	H	Fuel flow sensor
C	Fuel selector	I	Port (left) carburettor
D	Fuel filter (90° bend)	J	Fuel pressure sensor
E	Electric (auxiliary) fuel pump	K	Starboard (right) carburettor
F	Mechanical fuel pump		

Fuel system (912 ULS)

7.20 Lubrication system

For aircraft fitted with the 912 iS engine please refer to the supplement at the end of this manual.

912 ULS

The engine is provided with a dry sump forced lubrication system with a camshaft driven main pump with an integrated pressure regulator and oil pressure sensor. The main pump delivers oil from the oil reservoir, through an oil cooler (radiator) and oil filter to points of lubrication.

Surplus oil emerging from the points of lubrication gathers at the bottom of the crankcase from where it is forced back to the oil reservoir by piston blow-by gasses.

Oil temperature is sensed by a sensor located on the oil pump housing.

The lubrication circuit is vented at the oil reservoir. The oil reservoir is mounted on the firewall.

Refer to the latest revision / edition of the Rotax 912 ULS engine operator and maintenance manuals.

The lubrication system volume is approximately 3.5 liters (7.4 pints).

Oil type (912 ULS / 912 iS)

Automotive grade API SG (or higher) type oil, preferably synthetic or semi-synthetic**.**

Refer to the latest revision of the applicable Rotax engine and operator manuals and the latest revision of the applicable Rotax service bulletins.

7.21 Autopilot system

The autopilot system is integrated into / with the EFIS unit.

Please refer to the latest revisions of the MGL iEFIS Panel Operator Manual and MGL Integrated Autopilot User and Installation Manual for detailed instructions on autopilot operation and functionality.

The EFIS / autopilot inputs data from an electronic compass and AHRS, and controls two servos (one for pitch and one for roll) linked to the aircraft control system.

Power to the servos is controlled via a switch labeled AUTOPILOT, located on the instrument panel (refer to paragraph 7.17.2). This switch must be on for the autopilot / EFIS outputs to have any effect on aircraft attitude.

The autopilot can be engaged in several ways:

- The autopilot engage / disengage button on the control stick(s) (refer to paragraph 7.2).
- Via the EFIS keypad.

The autopilot can be disengaged in several ways:

- The autopilot engage / disengage button on the control stick(s) (refer to paragraph 7.2).
- Via the EFIS keypad.
- A servo reports (to the autopilot / EFIS) a slipping clutch or torque overdrive for 1 second, i.e. the pilot overrides the autopilot via mechanical force on the control stick.
- Removing power to the autopilot servos (switching off the AUTOPILOT switch), effectively removing the EFIS / autopilot's control / actuation of the servo motors. Refer to paragraph 7.17.2.

7.22 Position, anti-collision, taxi and landing lights

The aircraft is equipped with a landing light and taxi light in each wing leading edge. Each pair of landing lights is activated by a switch (labeled LAND) located on the instrument panel. Likewise each pair of taxi lights is activated by a switch (labeled TAXI) located on the instrument panel.

Combination navigation / position lights (red, green and white) and anti-collision lights (white) are fitted to the wing tips, in the standard configuration (red left, green right). A combination position / anti-collision light (white) is fitted on top of the rudder.

The white lights on the wingtips and rudder are dual function lights that can either be on continuously (position light), flash (anti-collision / strobe light) or flash at a higher brightness level superimposed on continuous operation (i.e. combination position and anti-collision / strobe light).

Position and anti-collision light functioning is dependent upon switch selection:

SWITCH		RED AND GREEN WINGTIP LIGHTS	WHITE WINGTIP LIGHTS	WHITE LIGHT ON RUDDER
NAV	STROBE			
ON	OFF	On (continuous illumination)	On (continuous illumination)	Off
OFF	ON	Off	On (flashing)	On (flashing)
ON	ON	On (continuous illumination)	On (continuous illumination) and flashing (with higher intensity) superimposed on continuous illumination.	On (continuous illumination) and flashing (with higher intensity) superimposed on continuous illumination.

8. AIRPLANE GROUND HANDLING AND SERVICING

8.1 Introduction

This section contains factory-recommended procedures for proper ground handling and servicing of the aircraft. It also identifies certain inspection and maintenance requirements, which should be followed at all times. Full details for servicing and maintenance appear in the aircraft maintenance manual. This document does not replace the maintenance manual. Reference should always be made to the maintenance manual.

8.2 Servicing fuel, oil and coolant

Refer to the appropriate chapters in the applicable Rotax engine maintenance and operator manuals and to the Sling LSA Aircraft Maintenance Manual

8.3 Towing and tie-down / mooring instructions

Towing

If you wish to move the aircraft on the ground other than under its own power, it is best to pull the aircraft forwards or push it backwards by hand holding one or more propeller blades, close to the spinner. The rear fuselage may be pushed down directly above a bulkhead or the horizontal stabilizer may be pushed down close to the root, directly over the front spar at the point where it attaches to a rib, in order to lift the nose of the aircraft for maneuvering purposes. It is best to press down on both points at once to spread the load. It is also acceptable to push the aircraft carefully backwards by putting pressure on the wing leading edges close to the root, directly on a nose rib, or on the horizontal stabilizer leading edge next to the root over a rib.

CAUTION

Avoid excessive pressure on the aircraft airframe - especially at or near control surfaces. The skins are very thin and minimum pressure should be placed on them. Maintain all safety precautions, especially in the propeller area.

Mooring

The aircraft should be tied down when parked outside a hangar. Mooring is necessary to protect the aircraft against possible damage caused by wind and gusts.

For this reason the aircraft is equipped with mooring eyes located on the lower surfaces of the wings and (one) under the tail.

Mooring procedure:

1. Verify: Fuel selector shut off, circuit breakers and Master switch switched off.
2. Verify: Magnetos switched off.
3. Secure the control column(s)(using for example a safety harness).
4. Close air vent.
5. Close and lock canopy.
6. Moor the aircraft to the ground by means of a mooring rope passed through the mooring eyes located on the lower surfaces of the wings and below the rear fuselage.

NOTE

In the case of long term parking, especially during winter, it is recommended to cover the cockpit canopy, or possibly the whole aircraft, by means of a suitable tarpaulin attached to the airframe.

8.4 Parking

It is advisable to park the aircraft inside a hangar, or alternatively inside any other suitable space (garage), with stable temperature, good ventilation, low humidity and a dust-free environment.

When parking for an extended period, cover the cockpit canopy, and possibly the whole aircraft, by means of a suitable tarpaulin.

8.5 Jacking

Since the empty weight of the aircraft is relatively low, two persons are usually able to lift the aircraft.

It is possible to lift the aircraft in the following manner:

- By pushing the fuselage rear section down above a bulkhead, the fuselage front section may be raised and then supported under the firewall. The same effect can be achieved by pressing down on the horizontal stabilizer as described under **Towing**.
- By lifting the rear fuselage under a bulkhead the rear fuselage may be raised and then supported under that bulkhead. The support should comprise a large, flat surface area to avoid damage to the under-fuselage skin. The wings should also be gently supported to prevent the aircraft from rolling.
- To lift a wing, push from underneath the wing **only** at the main spar area and again using a support that has a large surface area. Do not lift up a wing by handling the wing tip.
- A single wheel can be lifted by jacking carefully under the end of the wheel strut.

8.6 Road transport

The aircraft may be transported after loading on a suitable trailer. It is necessary to remove the wings before road transport. The aircraft and dismantled wings should be attached securely to protect against possible damage.

8.7 Cleaning and care

Use efficient cleaning detergents to clean the aircraft surface. Oil spots on the aircraft surface (except for the canopy!) may be cleaned with petrol / gasoline.

The canopy may only be cleaned by washing it with a sufficient quantity of lukewarm water and an adequate quantity of detergents. Use either a soft, clean cloth sponge or deerskin. Then use suitable polishers to clean the canopy.

Upholstery and covers may be removed from the cockpit, brushed and washed in lukewarm water with an adequate quantity of detergents. Dry the upholstery thoroughly before insertion into the cockpit.

CAUTION
Never clean the canopy under dry conditions and **never** use petrol or chemical solvents.

CAUTION
In the case of long term parking, cover the canopy to protect the cockpit interior from direct sunlight.

8.8 Assembly and Disassembly

Refer to the aircraft maintenance manual and the aircraft construction manual for assembly and disassembly instructions.

8.9 Aircraft inspection periods

Periods of checks and contingent maintenance depend upon operating conditions and overall condition of the aircraft.

Inspections and revisions should be carried out according to (at least) the following periods:

After the first	25 flight hours,
thereafter at	50 flight hours,
thereafter after every	100 flight hours or annually, whichever is soonest.

Refer to the engine operator's manual for engine maintenance.

Maintain the propeller according to the manual supplied with the unit.

Comprehensive aircraft maintenance procedures are set out in the aircraft maintenance manual.

8.10 Aircraft modifications and repairs

It is recommended that you contact the aircraft manufacturer prior to making any modifications to the aircraft, to ensure that the airworthiness of the aircraft is not affected. Always use only original spare parts produced by the aircraft (or engine/propeller) manufacturer, as the case may be.

If the aircraft weight is affected by a modification, a new mass and balance calculation is necessary. This should be completed comprehensively and new data / figures should be recorded in all relevant documentation.

9. SUPPLEMENTARY INFORMATION

This section contains the appropriate supplements necessary to safely and efficiently operate the aircraft when equipped with various optional systems and equipment not provided with the standard airplane.

List of inserted supplements

Date	Suppl. No.	Title of inserted supplement
04/06/12	02/2010	Airplanes fitted with a Magnum 601 Ballistic Parachute recovery system
19/10/12	04/2012	Airplanes fitted with a Rotax 912 iS engine

SUPPLEMENT 02/2010 – AIRPLANES FITTED WITH A MAGNUM 601 BALLISTIC PARACHUTE

This supplement must be contained in the Pilot Operating Handbook during operation of the airplane.

Information contained in this Supplement adds to or replaces information from the standards Pilot Operating Handbook in regard only to the specific sections addressed herein. Limitations, procedures and information not addressed in this Supplement remain as set out in the Pilots Operating Handbook.

This Supplement provides information necessary for the operation of an aircraft fitted with a Magnum 601 ballistic parachute.

1. The Sling LSA is designed specifically for convenient fitment of a Magnum 601 ballistic parachute recovery system. The system is designed to enable the pilot or passenger to deploy the parachute in case of emergency in such a manner that the aircraft structure is carried under the parachute to the ground, on the basis that the occupants will not be injured and the aircraft structure suffers minimum damage.

2. Use of a ballistic parachute system involves inherent risks and the system should be properly understood by the pilot prior to use.

BALLISTIC PARACHUTE OPERATIONAL PARAMETERS

PARAMETER	
Limit speed	320 km.h^{-1} / 198.84 mph / 172.77 kt.
Deployment time (limit speed)	3 s.
Maximum supported mass	759 kg / 1673.31 lb.
Descend rate (maximum mass)	7 m.s^{-1}. fpm

BALLISTIC PARACHUTE DEPLOYMENT

- Observe ballistic parachute operational parameters.
- Throttle - close.
- Magneto / ignition switches - off.
- Fuel pump(s) - off.
- Fuel selector – off.
- Deploy the parachute by pulling the T-shaped activation handle (situated in the center front) positively.
- Master and avionics switch - as dictated by radio communication requirements - off before impact with ground.
- Other electrical equipment switches - off.

SUPPLEMENT 04/2012 – AIRPLANES FITTED WITH A ROTAX 912 iS ENGINE

This supplement must be contained in the Pilot Operating Handbook during operation of the airplane.

Information contained in this Supplement adds to or replaces information from the standard Pilot Operating Handbook in regard only to the specific sections addressed herein. Limitations, procedures and information not addressed in this Supplement remain as set out in the Pilots Operating Handbook.

This Supplement provides information relating to the operation of an aircraft fitted with a Rotax 912 iS engine.

The Rotax 912iS comprises a fuel injected and electronically controlled variant of the Rotax 912 ULS engine. It has the same power rating as the Rotax 912 ULS engine and airplane performance with the two engines is accordingly materially similar, save for fuel economy which, particularly in the cruise, may be materially better in the case of the 912 iS engine.

Notwithstanding this, however, there are minor differences between the engines at starting and shutdown and in the case of certain engine related emergency procedures. The instructions in this supplement are the minimum required for the pilot to competently operate the 912 iS engine during normal flight conditions. It is the responsibility of the pilot to fully familiarize himself with the engine Operators Manual supplied by Rotax GmbH, a copy of which is supplied with each aircraft.

ROTAX 912 iS ENGINE OPERATING AND SPEED LIMITS

Always refer to latest edition / revision of the Rotax 912 iS operators manual for latest information regarding operating limitations.

ENGINE START AND OPERATION TEMPERATURE LIMITS	
Maxim (in flight)	60 °C (140 °F) (manifold temperature)
Maximum (at start)	50 °C (122 °F) (ambient temperature)
Minimum (at start)	-20 °C (-4 °F) (oil temperature)

ENGINE LOAD FACTOR (ACCELERATION) LIMITS	
Maximum	5 seconds at maximum -0.5 g.

Engine Model:		ROTAX 912 iS
Engine Manufacturer:		Bombardier-Rotax GMBH
Power	Max take-off	73.5 kW (98.6 hp) at 5800 rpm (maximum 5 minutes)
	Max continuous	69 kW (92.5 hp)at 5500 rpm
	Cruise	53 kW (71 hp) at 4800 rpm
Engine	Max take-off	5800 rpm, maximum 5 minutes
	Max continuous	5500 rpm
	Cruise	4 600 rpm to 5 400 rpm
	Idle	1 400 (minimum)
EGT	Maximum	950 °C
Cylinder head temperature	Minimum	N/A
	Maximum	150 °C (302 °F)
	Normal	75 to 110°C (167 to 230 °F)
Oil temperature	Minimum	50 °C (122 °F)
	Maximum	130 °C (266 °F)
	Normal	90 to 110 °C (194 to 230 °F)
Oil pressure	Minimum	0.8 bar (12 psi) – below 3500 rpm
	Maximum	7 bar (102 psi) – permissible for a short period on cold engine start
	Normal	2 to 5 bar (29 to 73 psi) – above 3500 rpm
Coolant temperature	Maximum	120 °C (248 °F)
Fuel pressure	Minimum	2.8 bar (42 psi)
	Maximum	3.2 bar (45 psi)

FUEL (912 iS) Minimum RON 95 / Minimum AKI 91			
Grade	**MOGAS**		DIN EN 228 Super, DIN EN 228 Super Plus. 91 Unleaded
	AVGAS	**Leaded**	AVGAS 100LL ASTM D910.

NOTE: AVGAS 100LL places greater stress on the valve seats due to its lead content and forms increased deposits in the combustion chamber and lead sediments in the oil system. Thus it should only be used in case of problems with vapor lock and when other types of gasoline are unavailable

ENGINE OIL (912 iS)	
Grade	Automotive grade API SG (or higher) type oil, preferably synthetic or semi-synthetic. When operating on unleaded fuels or MOGAS fully synthetic oil is recommended.

COOLANT 912 iS ENGINE		
Grade / type	1:1 Ethylene glycol based coolant and distilled water mixture.	**WATER FREE COOLANT NOT PERMITTED FOR USE WITH 912 iS**

Refer to the latest revision of the Rotax 912 iS operator / maintenance manuals and to the latest revision of Rotax service instruction SI-912i-001 with regard to selection of operating fluids.

ROTAX 912 iS FUEL SYSTEM

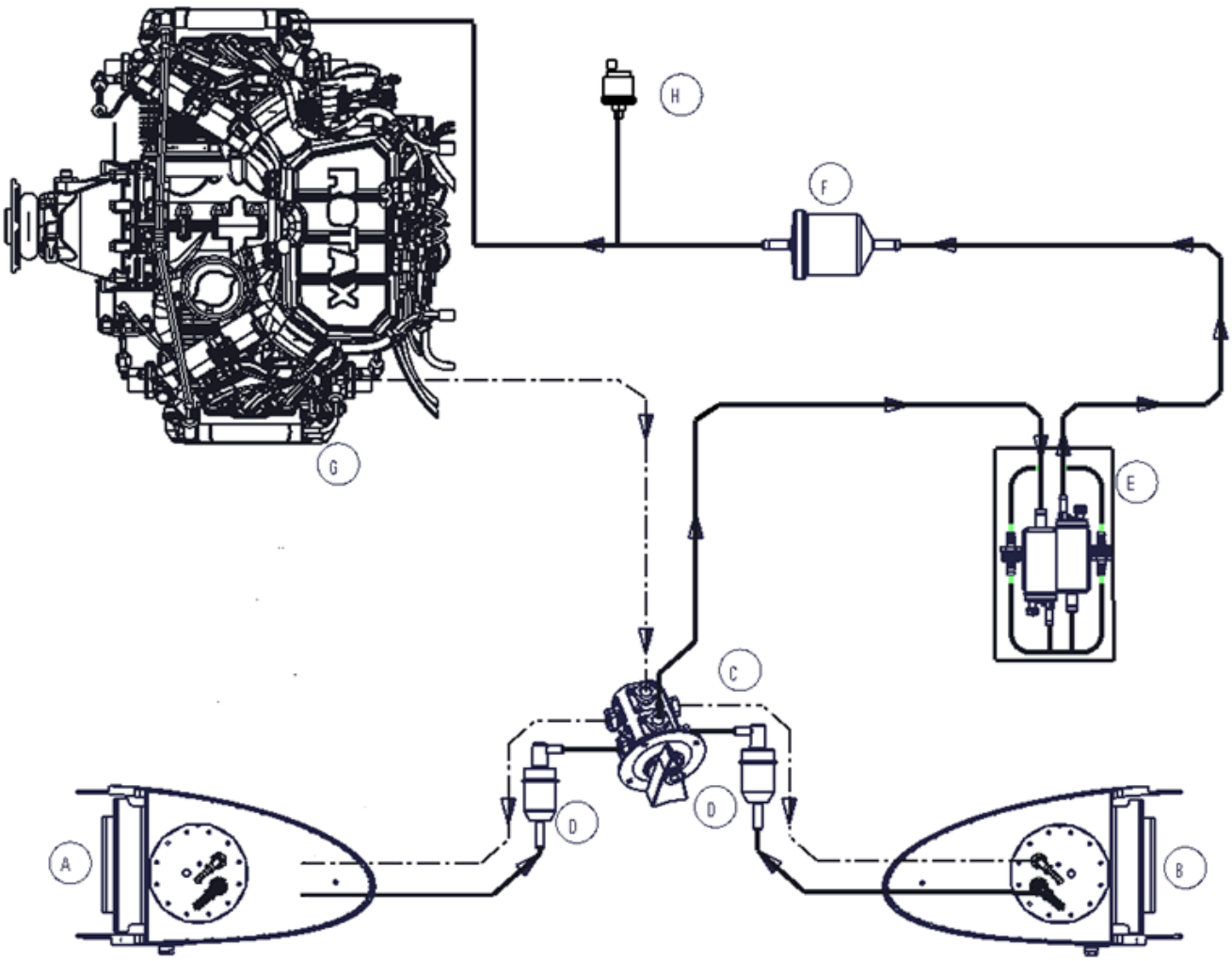

A	Port (left) fuel tank	F	Fuel filter
B	Starboard (right) fuel tank	G	912 iS engine
C	Fuel selector	H	Fuel pressure transducer
D	Fuel filter (90° bend)		
E	Fuel pump assembly		

Fuel feed is through two electric pumps. Each pump has a parallel installed check valve (NRV).

A fuel pressure sensor is connected to the fuel supply line. Fuel pressure is displayed on the EFIS.

Fuel return lines return excess fuel supplied by the fuel pump(s) to the fuel tank in use.

Fuel pumps

Switch (on instrument panel)	Pump
FUEL PUMP 1	Main
FUEL PUMP 2	Auxiliary

Main and auxiliary fuel pumps

The main and auxiliary fuel pumps are powered via the EMS / ECU. As long as power is available to the EMS / ECU (via Alternator A, Alternator B (in event of Alternator A failure) or via the main battery (the EMS battery back-up switch is on)) any one, or both of the fuel pumps can be selected / operational, irrespective of the master switch status.

SUPPLEMENTARY INFORMATION – OPERATIONAL USE OF THE FUEL SYSTEM

WARNING

At least one fuel pump must be operational at all times during flight for the engine to be operational! With no pump operational engine stoppage will occur due to fuel starvation.

ELECTRICAL SYSTEM

The engine is equipped with two 3-phase ac generators (alternators). One alternator (Alternator A) supplies power to the EMS/ ECU and the other (Alternator B) is available to the aircraft systems / to charge the battery. The output of the charge system is connected to the main bus via a circuit breaker (labeled FUSEBOX) located on the instrument panel

The main battery is connected to the main bus (and thus the charge system) via the Master switch. The back-up battery supply to the EMS/ECU is sourced directly from the battery, and routed to the EMS/ECU via an activation switch (labeled ECU BKUP) located on the instrument panel.

Until the engine reaches idling speed the EMS / ECU requires a 12 V supply from the aircraft system (i.e. the main battery). When Alternator A fails the EMS / ECU is automatically switched over to Alternator B. Note that in this event Alternator B output is not (or only partially) available to the aircraft systems and that no (or reduced) main battery charging can occur. Subsequent failure of Alternator B will result in engine stoppage. In that event power (EMS / ECU back-up voltage) can be supplied to the EMS / ECU system via the aircraft system (main battery) voltage (i.e. EMS / ECU battery back-up switch is switched on) and the engine restarted.

The engine can run (provided EMS / ECU back-up switch in on) after an Alternator A and Alternator B failure (i.e. both failed), until the battery voltage is low (approximately 30 minutes if all ancillary equipment is switched off and provided that the battery is fully charged at time of (the last remaining) alternator failure). The engine will cease running due to fuel starvation (due to the ECU/EMS/electrical pump(s) stopping) when the battery is depleted.

CAUTION

The EMS / ECU battery back-up switch should not be in the ON position during flight, except when both Alternator A and Alternator B have failed.

SUPPLEMENTARY INFORMATION – ELECTRICAL EQUIPMENT SELECTION / CONTROL SWITCHES

SWITCH / LABEL	FUNCTION	POSITION
MASTER / STARTER KEY SWITCH	Power disconnected from main bus	OFF
	Main bus connected to power	ON
	Engage starter motor	START
EFIS	Switch power (from main bus) to EFIS system on / off.	UP (ON) DOWN (OFF)
EFIS BKUP	Connects EFIS system to EFIS back-up battery supply.	
FUEL PUMP 1	Switch main fuel pump in / off.	
FUEL PUMP 2	Switch auxiliary fuel pump on / off.	
LAND	Switch landing lights on / off.	
TAXI	Switch taxi lights on / off.	
NAV	Select position (navigation) lights.	
STROBE	Select anti-collision (strobe) lights.	
AVIONICS	Switch power to radio and transponder (if fitted) on / off.	
ECU BKUP	Connects the EMS / ECU to the main battery (to provide back-up power).	
AUTOPILOT	Switch power to autopilot servos on / off.	
MASTER	Switch power to main bus on / off.	
LANE A	Select Lane A magneto / ignition source.	
LANE B	Select Lane B magneto / ignition source.	

SUPPLEMENTARY INFORMATION – MASTER AND STARTER SWITCH(ES)

The Master / Starter switch in 912 iS equipped aircraft provides the following functionality:

- Activates the starter.

- Connects / disconnects the main battery to the main bus.

Note that in the case of 912 iS powered aircraft the charge system output is directly connected to the main bus (via a circuit breaker), <u>and not via the master switch as in 912 ULS engined aircraft</u>.

This implies that, with the Master switch turned off:

- The main bus remains powered, provided that the charge system output is operational. In the case where Alternator B is used to power the EMS / ECU (i.e. Alternator A failed), power may not be available the main bus, or reduced power may be available. Also see **SUPPLEMENTARY INFORMATION – ALTERNATOR FAILURE** and **SUPPLEMENTARY INFORMATION – MAIN BUS POWER FAILURE** in this supplement.

- The battery is disconnected from the main bus and charge system output.

START SYSTEM / ELECTRIC FUEL PUMPS WIRING DIAGRAM (912 iS)

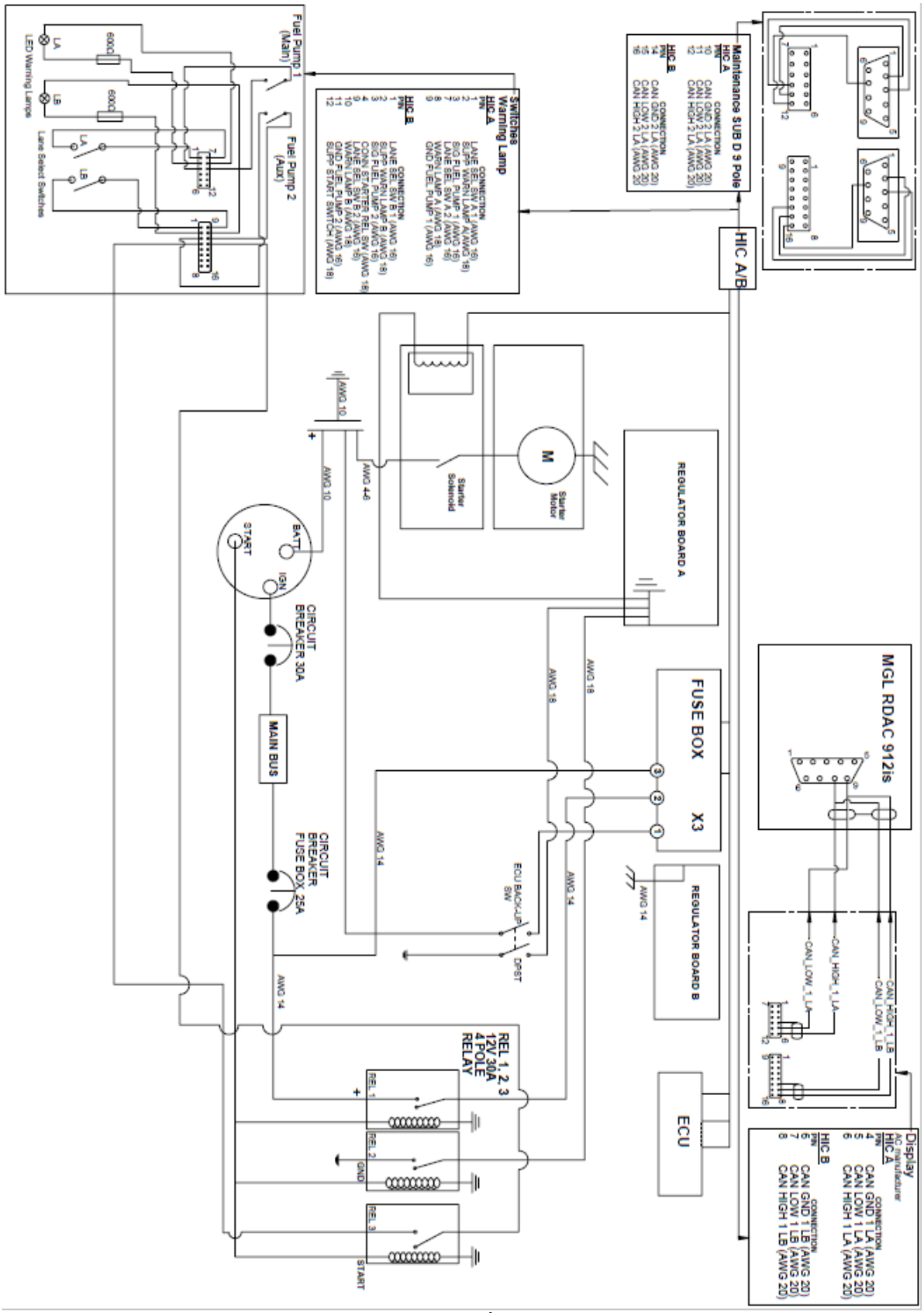

SWITCHES AND CIRCUIT BREAKERS WIRING DIAGRAM (912 iS)

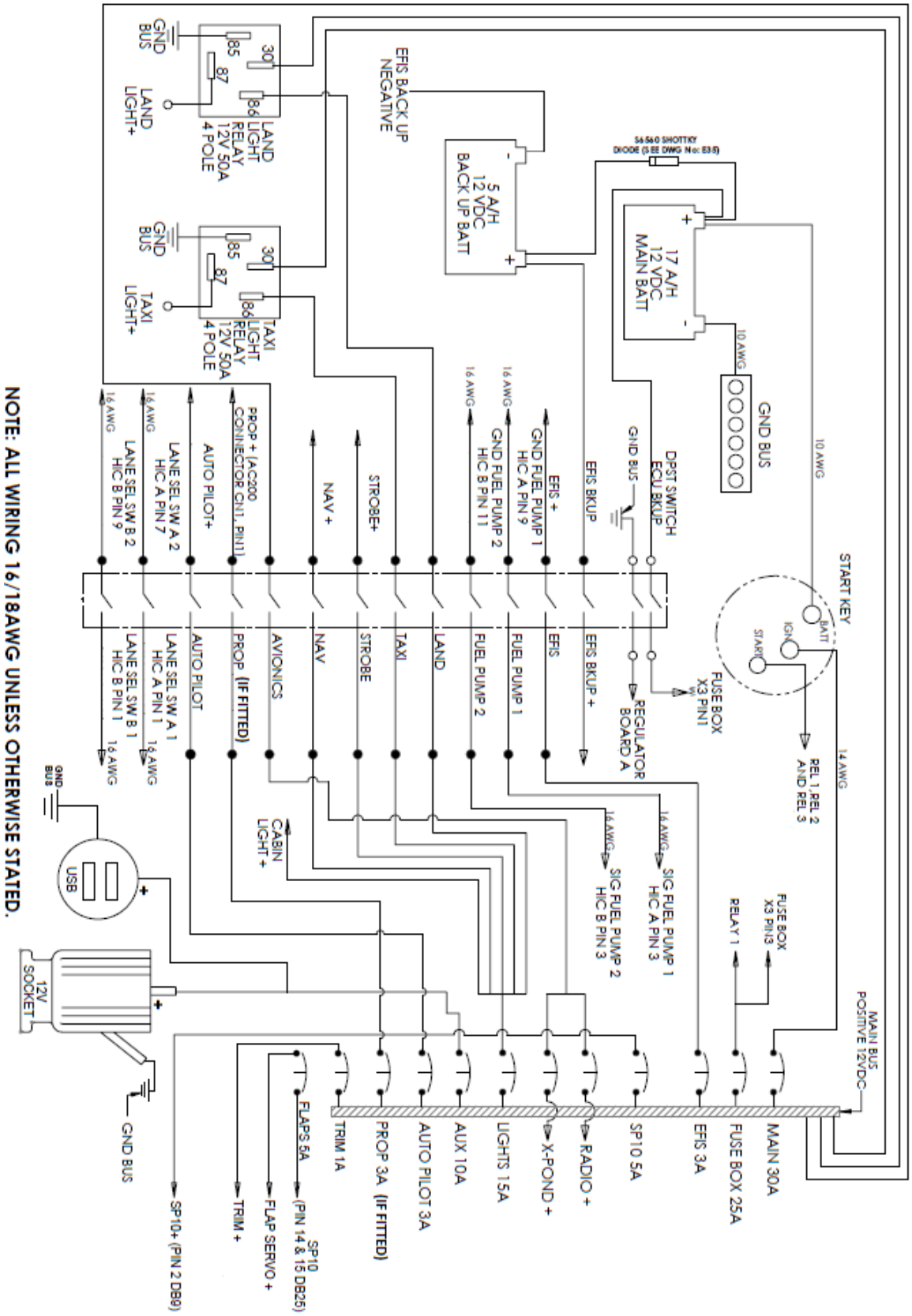

ROTAX 912 iS LUBRICATION SYSTEM

The engine is provided with a dry sump forced lubrication system with a camshaft driven pump with an integrated pressure regulator. The pump delivers oil from the oil reservoir, through an oil cooler (radiator) and oil filter to points of lubrication.

Surplus oil emerging from the points of lubrication gathers at the bottom of the crankcase from where it is forced back to the oil reservoir by piston blow-by gasses.

Oil temperature is sensed by a sensor located on the crankcase.

The lubrication circuit is vented at the oil reservoir. The oil reservoir is mounted on the firewall.

Refer to the latest revision / edition of the Rotax 912 iS engine operator and maintenance manuals.

The lubrication system volume is approximately 3.5 liters (7.4 pints).

SUPPLEMENTARY INFORMATION – FUEL CONSUMPTION

Take off performance (5 800 RPM)	26.1 l/hr	(6.9 US gal/hr).
Max continuous power (5 500 RPM)	23.6 l/hr	(6.2 US gal/hr).
75% continuous power (cruise)	16.5 l/hr	(4.35 US gal/hr).

Refer to the fuel consumption graphs and tables in the latest edition / revision of the Rotax 912 iS operator manual for up to date information.

SUPPLEMENTARY INFORMATION – ALTERNATOR FAILURE

ALTERNATOR A FAILURE (ALTERNATOR B OPERATIONAL)

When Alternator A fails (with Alternator B still operative) the EMS/ECU is automatically switched over to Alternator B. Note that in this event Alternator B output is not (or only partially) available to the aircraft systems / to charge the main battery. **Procedure as in paragraph 3.7.4.**

Alternator A failure is evidenced by the steady illumination of the Lane A (red) warning light. The main bus / system voltage (indication on EFIS) could show a reduced reading and a battery discharge current may be indicated

WARNING

The engine will continue to run after an Alternator A failure (with Alternator B still operative), as the EMS /ECU is then powered by Alternator B. However, since no charging of the battery occurs in this circumstance all non-critical electrical equipment should be switched off to conserve battery charge (as the battery would be needed to supply power to the EMS/ECU/fuel pumps if Alternator B subsequently fails).

ALTERNATOR B FAILURE (ALTERNATOR A OPERATIONAL)

When Alternator B (with Alternator A still operative) fails no main battery charging can occur. In this case the EMS / ECU remains powered via Alternator A. **Procedure as in paragraph 3.7.4**.

Alternator B failure could be indicated by a drop in the main bus voltage (displayed on EFIS) and a battery discharge current may be indicated.

WARNING

The engine will continue to run after an Alternator B failure (with Alternator A still operative), as the EMS /ECU is still powered by Alternator A. However, since no charging of the battery occurs in this circumstance all non-critical electrical equipment should be switched off to conserve battery charge (as the battery would be needed to supply power to the EMS/ECU/fuel pumps if Alternator A subsequently fails).

ALTERNATOR A AND ALTERNATOR B FAILURE

This will result in engine stoppage (since no power is available to the EMS/ ECU). In this case the EMS / ECU must be powered from the main battery (by switching on the EMS / ECU battery back-up switch). **Procedure as in paragraph 3.7.4**.

WARNING

The engine can run (with the EMS / ECU powered from the main battery) after an Alternator A and B failure, until the battery voltage is low (approximately 30 minutes, if all ancillary equipment is switched off and provided that the battery is fully charged at the time of (the last remaining) alternator failure). The engine will cease running due to fuel starvation (due to electrical pump(s)/EMS/ECU stopping) when the battery is depleted.

SUPPLEMENTARY INFORMATION – MAIN BUS

When power to the main bus is unavailable / fails the following equipment, in addition to those listed (and applicable) in paragraph 7.17 under **Main bus**, becomes non-operational:

1. Elevator trim.

SUPPLEMENTARY INFORMATION - ENGINE START

1. Master switch - on.
2. EFIS back-up battery - on, verify EFIS on and back-up battery voltage.
3. Magneto / ignition switches (Lane A and B) - on (both).
4. EMS battery back-up switch - on.

Once power (EMS battery back-up is switched on) is supplied the Lane A and Lane B warning lights should illuminate for approximately 5 seconds and then extinguish. If either or both lights flash or fails to illuminate it is indicative of a deficiency.

WARNING
Do not take the engine into operation before having rectified the cause of the deficiency.

5. Fuel selector - select emptiest tank (if not empty).
6. Throttle - set to idle position.
7. Fuel pumps (both) - on.

8. Propeller area - clear of people and obstructions.

9. Starter - activate (for maximum 10 seconds).

Immediately after start-up:

10. Throttle - adjust for smooth running (approximately 2000 rpm).
11. Oil pressure - increase within 10 seconds.
12. Warm up engine at 2000 rpm for one minute.
13. Increase engine rpm (approximately 3000 rpm) until Alternator B indicates 13.8 to 14. 4 V.
14. Reduce engine rpm to 2500 rpm and continue warm up until oil temperature is 50 °C (122 °F).
15. EMS battery back-up switch - off.

At an engine start with low oil temperature continue to watch the oil pressure as it could drop again due to the increased resistance in the suction line.

Verify all engine instrument readings.

CAUTION

The starter should be activated for a maximum of 10 seconds, followed by a (at least) 2 minute pause to allow the starter to cool.

Verify the oil pressure, which should increase within 10 seconds. Increase of engine rpm is only permitted if oil pressure is steady above 3 bar (44 psi).

To avoid shock loading, start the engine with the throttle lever set for idling or 5% open at maximum, then wait 3 seconds to reach constant engine speed before accelerating the engine.

SUPPLEMENTARY INFORMATION – BEFORE TAKE OFF

Check the Lane A and Lane B ignition circuits at 4 000 rpm.
No rpm drop should occur when Lane B is switched off. An rpm drop of less than 180 rpm is permissible when Lane A is switched off.

Please read the applicable Rotax Operators Manual for further information in relation to the use of the engine.